Benchmark Specifications and Results for α and Λ in HEU Metal System Using ORSphere

Margaret A. Marshall
John D. Bess
Idaho National Laboratory

2014 ANS Winter Meeting
Anaheim, California
9-13 November 2014

Outline

- Critical Experiment Overview
- Critical Configuration Benchmark Evaluation
- Kinetic Measurements
  - β_{eff} Benchmark Evaluation Overview
  - α Measurement Overview
  - α Measurement Benchmark Evaluation
  - Λ Derived Value
  - Λ Benchmark Evaluation
  - α and Λ Sample Calculations
- Future Work

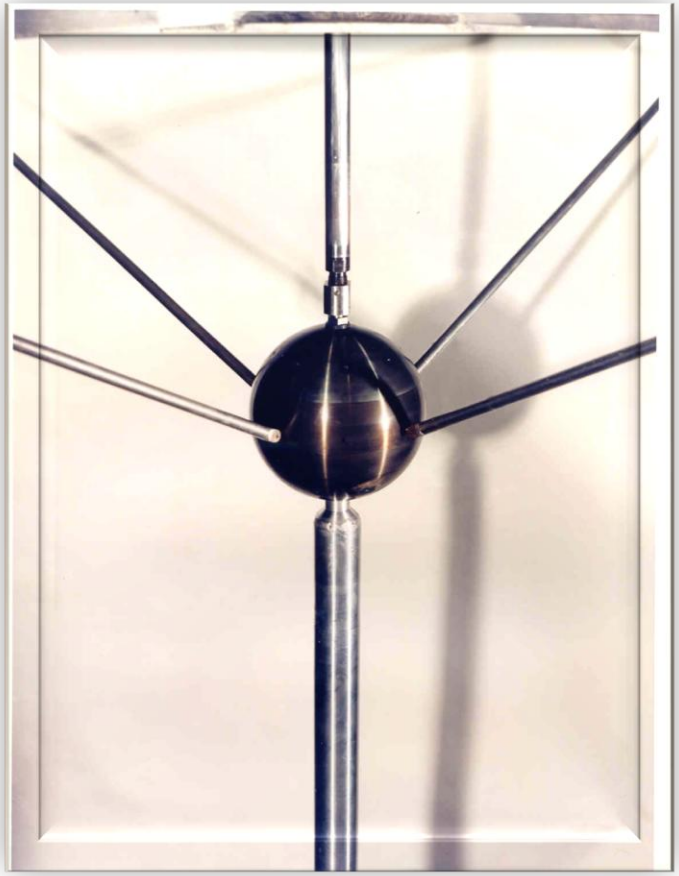

Experiment Facility

- Oak Ridge Critical Experiment Facility
  - Vertical Lift Machine
- John T. Mihalczo, team leader
  - 1971-1972

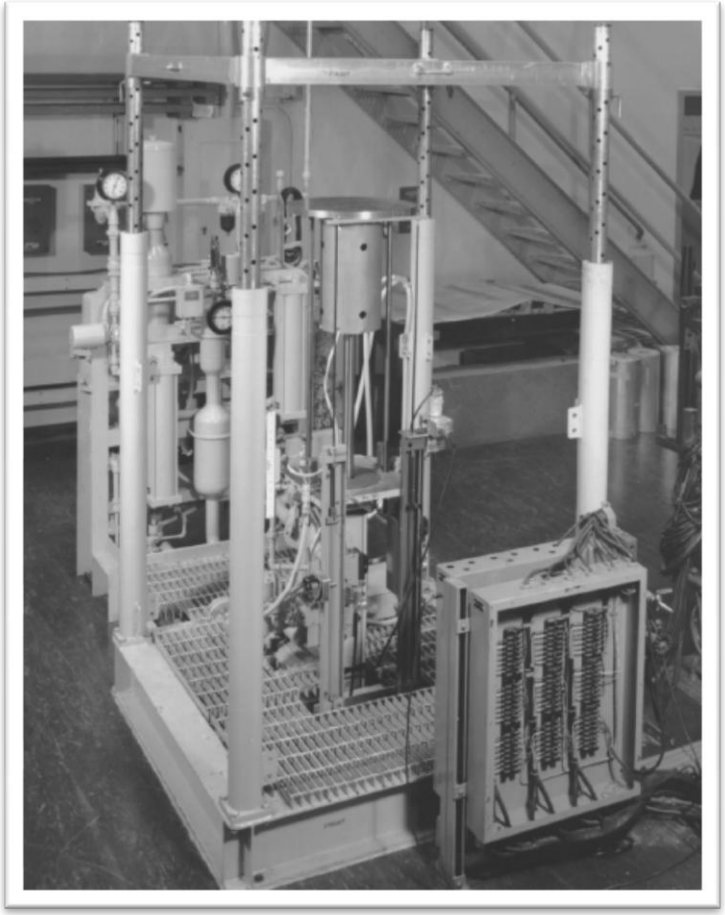

ORSphere Critical Experiment Overview

- Two Critical Configurations
  - First, slightly supercritical
  - Machined Radius
  - Second, slightly subcritical
- Purpose to create a more accurate experiment than GODIVA I
  - Detailed assembly measurements
    - Component dimensions, masses, etc.
    - Experimentally determined worths for corrections
  - More spherical
  - Less structural material in sphere proximity

Experiment Overview

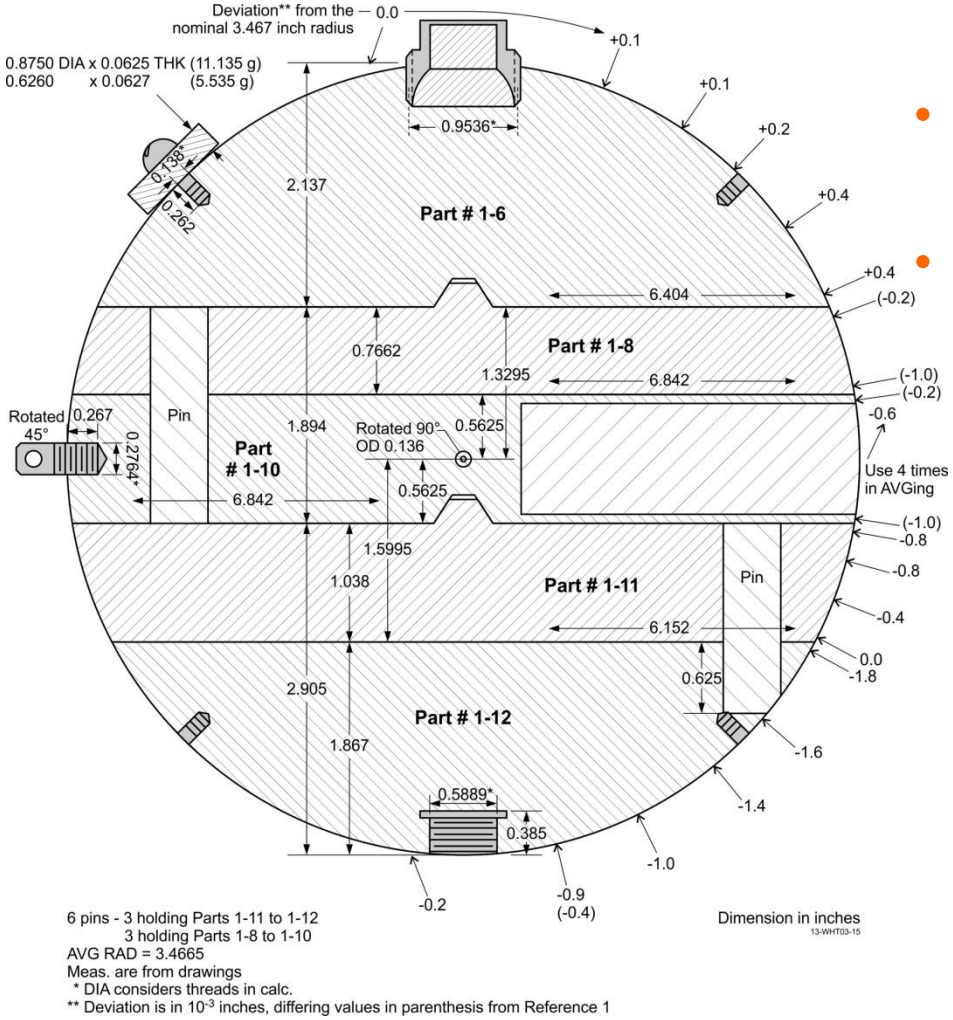

6 pins - 3 holding Parts 1-11 to 1-12
3 holding Parts 1-8 to 1-10
AVG RAD = 3.4665
Meas. are from drawings
* DIA considers threads in calc.
** Deviation is in 10^{-3} inches, differing values in parenthesis from Reference 1

- Nominal Radii of 8.80618 and 8.74395 cm.
- HEU Metal (ORALLOY)
  - 93.2 wt.% ^{235}U
- Experiment parameters precisely measured:
  - Dimensions
    - ±0.0001 in.
  - Mass
    - ±0.01 g
  - Isotopics
    - ±1% ^{234}U & ^{236}U
    - ±0.005 wt% ^{235}U
  - Impurities
    - ~500 ppm average content

Critical Configuration Benchmark Evaluation

- Critical configuration evaluation presented at ND2013
  - Modeling error had caused results to be ~1% low
  - (results now ~0.18% high)
- Two Benchmark Models
  - Detailed and Simple models
- Experimental Uncertainty
  - 0.0007 Δk_{eff} (1σ)
  - Largest contribution due to uncertainty in curve of ellipsoidal parts (0.00066)
    - This uncertainty not even addressed in evaluation of GODIVA benchmark

HEU-MET-FAST-100

Critical Configuration Benchmark Evaluation

- Measured and calculated simplification biases
  - Detailed model: (Case 1 shown here)
    - Explicitly model each ellipsoidal section
    - Button holes
    - Diametral hole
    - HEU Pins

- Case 1
  - -0.00192 ±0.00013 Δk_{eff}
- Case 2
  - -0.00191 ±0.00013 Δk_{eff}

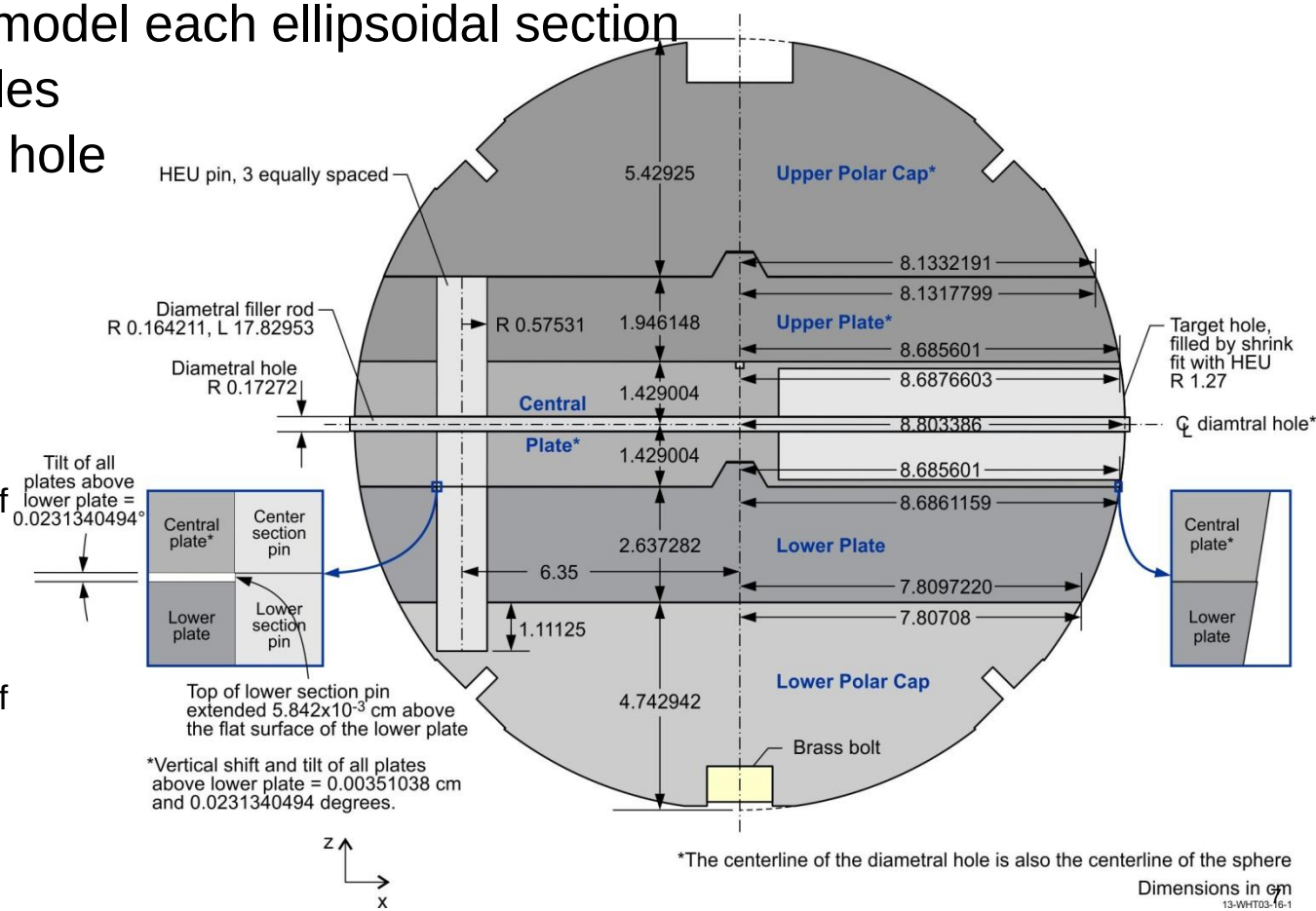

Critical Configuration Benchmark Evaluation

- Simple Benchmark Model
  - Solid, Homogenous, HEU Sphere
  - Retained Si, B, and C impurities
- Case 1
  - -0.00140 Δk_{eff}
- Case 2
  - -0.00185 Δk_{eff}

- Sample Calculations
  - MCNP5, KENO-VI, MONK, COG11.1, XSDRNPM
  - ENDF/B-VII.0, JEFF-3.1, JENDL-3.3, JENDL-4, ENDF/B-VI.8, ENDF/B-V.2
- MCNP5, ENDF/B-VII.0
  - Calculated ~0.18% High

	Case 1			Case 2		
Experimental k_{eff}	1.00447	±	0.00014[a]	0.99846	±	0.00013[a]
Detailed Model Benchmark k_{eff}	1.0026	±	0.0007[b]	0.9966	±	0.0007[b]
Simple Model Benchmark k_{eff}	1.0031	±	0.0007[b]	0.9966	±	0.0007[b]

(a) This uncertainty is accounted for in Section 2.1.
(b) This uncertainty includes the experimental and bias uncertainty.

Reactor Physics Benchmark Evaluation

- Evaluated measurements of
  - Reactivity Worths
    - Buttons, diametral rod, central void
  - Reactivity Coefficient
    - Surface material worth
  - Kinetic Parameter
    - β_{eff}
      - (June 2014 ANS)
    - α and Λ
      - (This Meeting)
  - Reaction Rates
    - Neutron importance
    - Fission density
      - (June 2015 ANS)

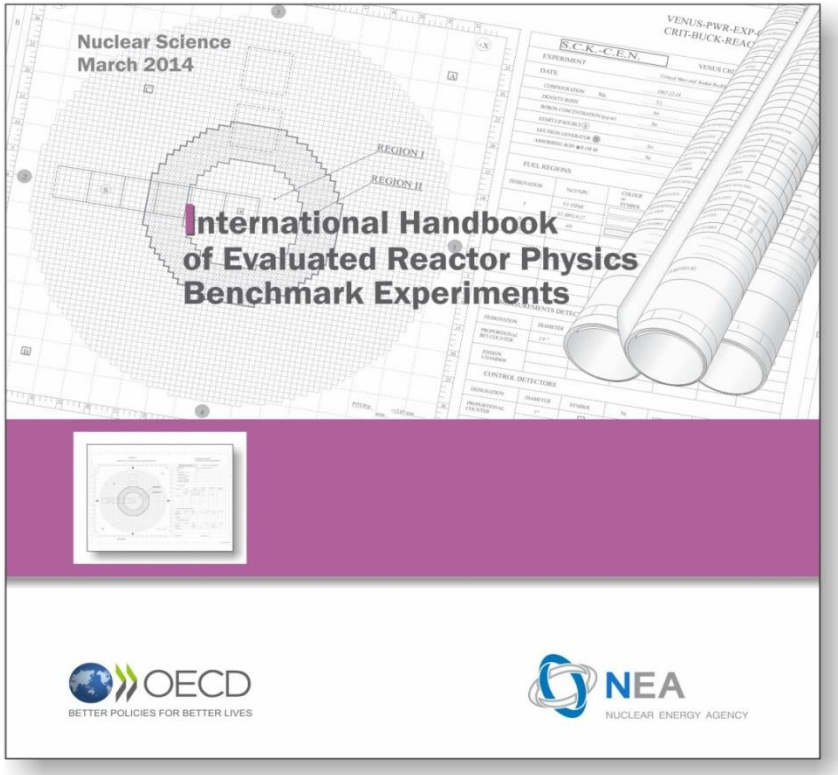

ORSPHERE-FUND-EXP-001

β_{eff} – Measurement Method

$$\beta_{eff} = \Delta\rho(\Delta k) / \Delta\rho(\$)$$

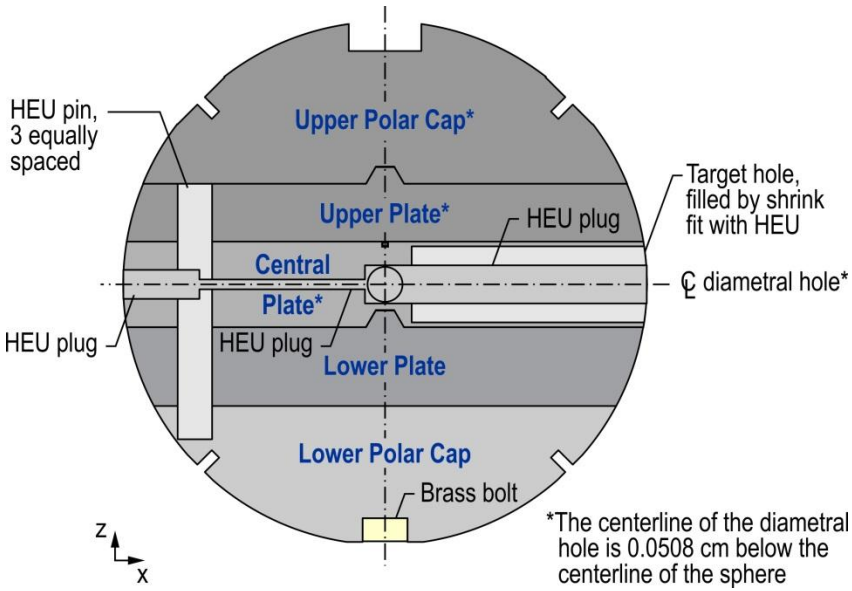

*The centerline of the diametral hole is 0.0508 cm below the centerline of the sphere

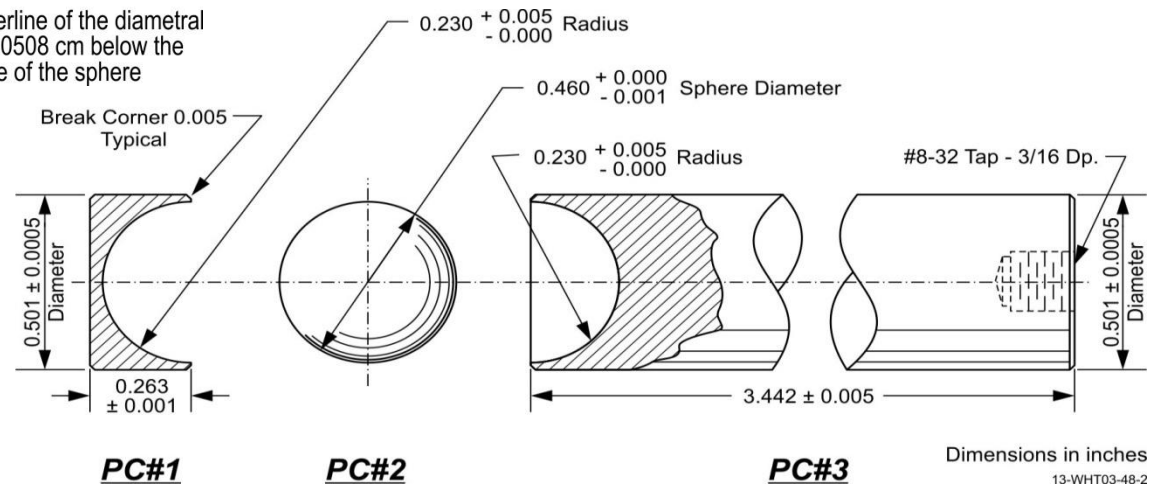

β_{eff} Benchmark Model

- Benchmark Value: β_{eff} = 0.00657 ± 0.00009
  - Agrees well with GODIVA I experimental value of 0.0066
- Sample calculation result, MCNP5-1.60, ENDF/B-VII.0:
  - 0.00651 ± 0.00003 (-0.86%, -0.64σ)

- Limitations of method
  - Need to very accurately measure worth values
  - Worth value of uniform composition
  - Worth values that can be accurately calculated

Prompt Neutron Decay Constant, α

- Rossi-α and randomly pulsed neutron (RPN) measurements
- Three ^{252}Cf time-tagged fission neutron sources
  - <0.15 µg ^{252}Cf, ~25,000 to 86,000 fissions per second
- Spiral Fission Counter (SFC)
  - 93 wt.% ^{235}U Metal
  - Uranium split plugs used around SFC shaft to minimized void introduced
- Center plate re-machined
  - Surface Hole
  - Diametric Hole

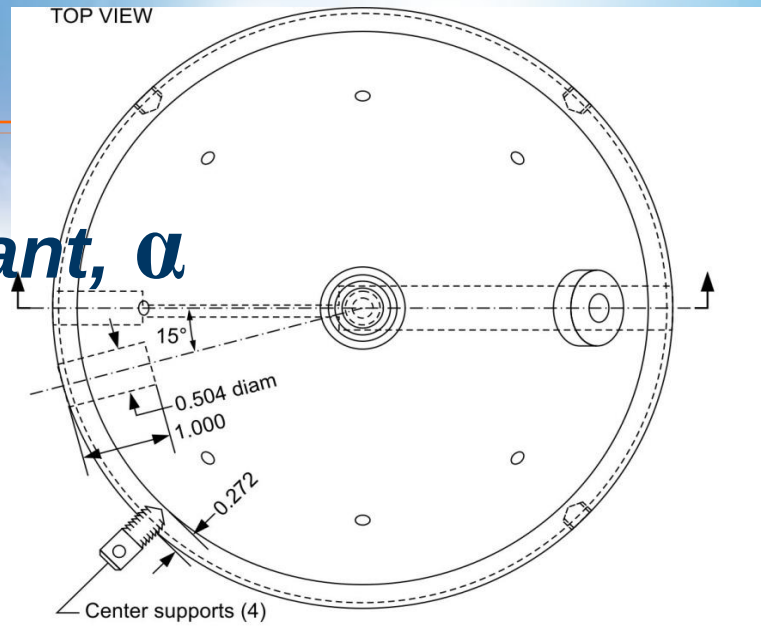

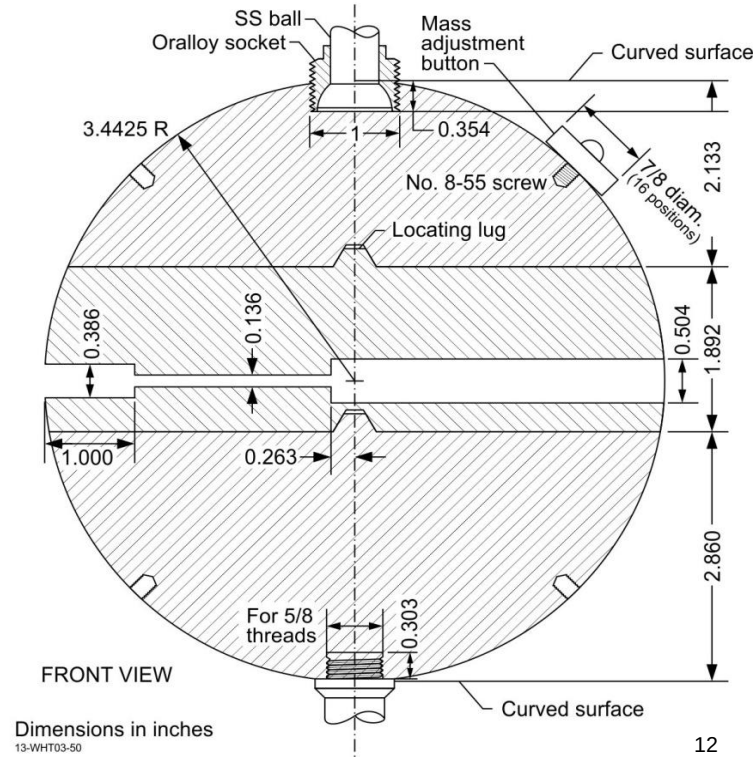

Prompt Neutron Decay Constant, α

- Reactivity ranged from ±0.5 ¢.
- Rossi-α and RPN measurements back to back
- Rossi-α
  - Continuous
- RPN
  - 25 cycles per measurement

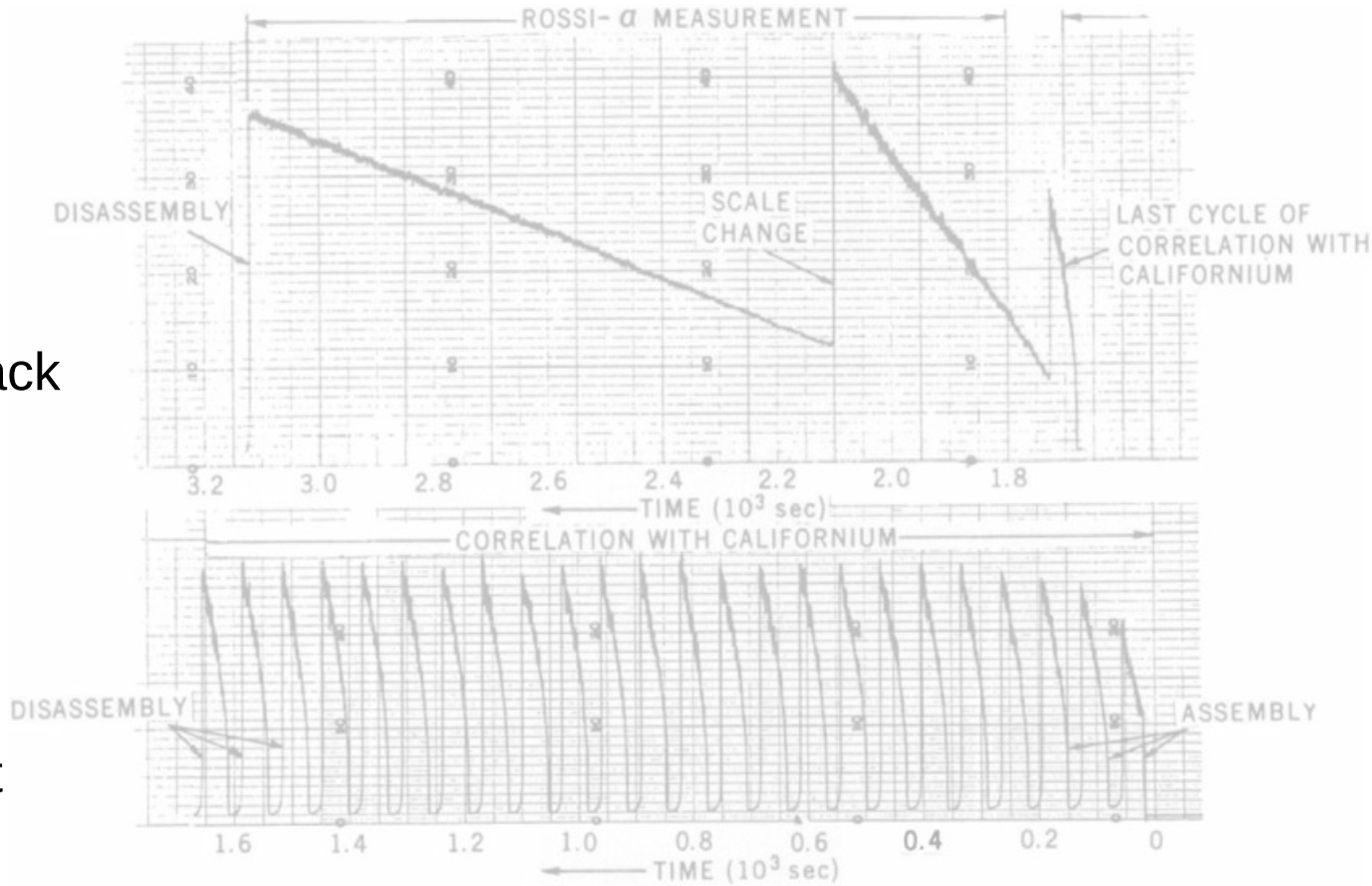

Note: The time scale starts at the bottom right of the figure, moves left and ends at the upper left of the figure.

Prompt Neutron Decay Constant, α

"The data from both types of measurements were fitted by nonlinear least-squares method to the function $\boldsymbol{D} + \boldsymbol{E}\mathbf{exp}(-\boldsymbol{\alpha t})$ to determine the prompt neutron decay constant ($\boldsymbol{\alpha}$) with the value of D fixed and obtained appropriately from the average count rate, the detected Cf fission rate, and the width of the time bins."

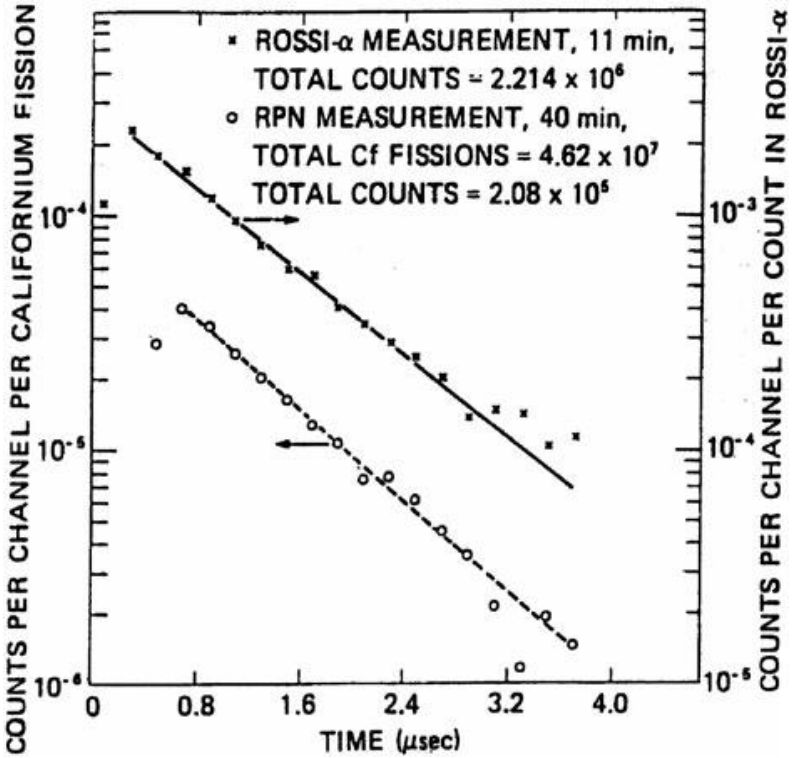

$$\alpha = \frac{1}{n(t)}\frac{dn}{dt}$$

Prompt Neutron Decay Constant, α

- Variance weighted average of 538 measurements
  - No values discarded
- Prompt Neutron Decay Constant: $\alpha = 1.1061 \pm 0.0009\ \mu s^{-1}$
- Comparable to GODIVA value: $\alpha = 1.10 \pm 0.01 \mu s^{-1}$

Cf Chamber[a]			Spiral Fission Chamber[b]		Prompt Neutron Decay Constant (μs^{-1})			
Number	Location	Radius (inch)	Location	Radius (inch)	Rossi-Alpha	Randomly Pulsed Neutron	All Values[c]	
59	DH	2.717	DH	1.678	1.1172 ± 0.0035	1.1089 ± 0.0050	1.1145 ± 0.0028	(107)
59	DH	2.717	DH	0	1.1061 ± 0.0016	1.1157 ± 0.0030	1.1082 ± 0.0014	(152)
2	Surface	3.512	DH	0	1.1075 ± 0.0022	1.1226 ± 0.0070	1.1089 ± 0.0021	(81)
61	DH	0.102	SH	2.693	1.1476 ± 0.0097	0.9478 ± 0.0880	1.1451 ± 0.0097	(14)
61	DH	1.78	SH	2.693	1.0965 ± 0.0059	1.0817 ± 0.0077	1.0919 ± 0.004	(44)
61	DH	2.472	DH	0	1.0907 ± 0.0027	1.0925 ± 0.0046	1.0904 ± 0.0024	(94)
61	DH	0.012	Scintillator at surface[d]		1.1046 ± 0.0075	1.1102 ± 0.0066	1.1078 ± 0.005	(46)
Average of All Values							1.1061 ± 0.0009	(538)

(a) Chamber 61 (0.500-inch-diameter; 8.6×10^4 fissions/second) could be at any radius in the DH and in the 0.504-inch-diameter SH. Chamber 59 (0.375-inch-diameter; 2.6×10^4 fissions/second) could be located only at one end of the DH, and chamber 2 (1.000-inch-diameter; 5.6×10^4 fissions/second) only adjacent to the outer surface. The radial location given in the location of the Cf deposit in the ionization chamber.

(b) The 0.50-inch-diameter, 0.500-inch-long SFC could be placed at any radius in the diametral hole of in the 0.5-in.-diameter SH. The radial location given is for the center of the SFC.

(c) The values in parentheses are the numbers of both types of measurements that were performed.

(d) The scintillator was adjacent to the outer surface of the sphere. The scintillators were shielded with 0.25-inch-thick lead, and this lead shielding actually was in contact with the sphere surface.

Prompt Neutron Decay Constant, α , Evaluation

- Measured over many runs (538)
  - Numerous days → Temperature + reassembly
  - Varied detector and source position → Arrangement
  - Two Measurement Methods
  - Varied configuration using buttons
  - Included all measured values
- Drives down uncertainty
- Originally believed that systematic and random uncertainties are accounted for because of the large number of measurements.
- But……

Prompt Neutron Decay Constant, α , Evaluation

During review by the International Reactor Physics Benchmark Experiment Project (IRPhEP) Technical Review Group:**

- All 538 runs are not independent
- Correlation between many of the runs
- Taking deviation of variance weighted average fails to account for possible systematic uncertainties.
- Given uncertainty of ±0.0009 μs^{-1} is:
  - increased by $\sqrt{538}$ (number of runs)
  - divided by $\sqrt{7}$(number of independent source/detector configurations).
- Final experimental uncertainty:

$$1.1061 \pm 0.0079\ \mu s^{-1}$$

** Incorrect in ANS Transaction Paper! Full evaluation in the International Handbook of Evaluated Reactor Physics Benchmark Experiments should be referenced for most up-to-date evaluation.

Prompt Neutron Decay Constant, α , Benchmark Model

- Smaller sphere (Case 2)used for α measurements with buttons to keep system at delayed critical (±0.5 ¢)
- Began with Simple benchmark model for critical configuration
- Modified to bring reactivity up to delayed critical using surface material worth coefficient
  - k_{eff}: 0.9966 ± 0.00069
    - Reduced from 70 pcm so 2.0¢ reactivity measurement uncertainty is not double counted with the surface material worth coefficient
  - Surface material worth coefficient: 0.086 ± 0.003 ¢/g
  - β_{eff}: 0.00657 ± 0.00009
- Sphere mass must be increased by 603.8 ± 125.5 ** gram to reach delayed critical.
- Radius of benchmark model 8.76339 ± 0.00692 cm

** There was an error in the uncertainty propagation for the benchmark model at the time the ANS Transaction was written! Full evaluation in the International Handbook of Evaluated Reactor Physics Benchmark Experiments should be referenced for most up-to-date evaluation.

Prompt Neutron Decay Constant, α , Benchmark Model

- Radius of benchmark model 8.76339 ± 0.00692 cm
  - Radius uncertainty is bias uncertainty
    - accounts for uncertainty in:
      - Case 2 benchmark model
      - Surface material worth coefficient
      - β_{eff}
    - 27.2 times larger than the radius uncertainty!
    - Corresponds to 0.00136 Δk_{eff}
- Bias uncertainty in α is ± 0.229 μs^{-1}
- Experimental uncertainty in α is ± 0.0079 μs^{-1}
- Benchmark prompt neutron decay constant:

$$1.1061 \pm 0.229\ \mu s^{-1}\ (20.76\%)$$

Comparison to Godiva

- Reported GODIVA α:
  - $1.10 \pm 0.01\ \mu s^{-1}$
  - Measurement uncertainty only
  - Has not been evaluated and no benchmark model for prompt neutron decay constant derived.
- ORSphere
  - Experimental Uncertainty: $\pm 0.0079\ \mu s^{-1}$
  - Bias uncertainty: $0.229\ \mu s^{-1}$
  - $1.1061 \pm 0.229\ \mu s^{-1}$

  - Using current HEU-MET-FAST-001: benchmark $k_{eff} = 1.000 \pm 0.001$
  - α uncertainty would increase to $\pm 0.167\ \mu s^{-1}$

Mean Neutron Generation Time, Λ

- Using point kinetics and the definition of α, the Mean neutron generation time, Λ, can be derived.

$$\frac{dn(t)}{dt} = \frac{\rho(t)-\beta_{eff}}{\Lambda} n(t) + \sum_{i=1}^{6} \lambda_i c_i(t),$$

$$\frac{dc_i(t)}{dt} = \frac{\beta_i}{\Lambda} n(t) - \lambda_i c_i(t), \quad i = 1, \ldots, 6$$

$$+ \quad \alpha = \frac{1}{n(t)} \frac{dn}{dt}$$

$$\alpha = \frac{\rho - \beta_{eff}}{\Lambda}$$

$$\Lambda = l = \frac{\rho - \beta_{eff}}{\alpha}$$

$$\Lambda = \frac{\beta_{eff}}{\alpha}$$

Mean Neutron Generation Time, Λ

- At delayed critical: $\Lambda = \frac{\beta_{eff}}{\alpha}$
  - β_{eff} :0.00657 ± 0.00009
  - Using the experimental uncertainty for α:
    - α :1.1061 ± 0.0079 μs^{-1}
    - Λ= 5.94 ± 0.092 nsec (derived measurement)
    - (Compared with derived GODIVA Λ = 6 nsec)
- Benchmark model for Λ same as for α
  - Using the benchmark uncertainty (including bias unc.) for α:
    - α :1.1061 ± 0.229 μs^{-1}
    - Λ= 5.94 ± 1.24 nsec

Sample Calculation for α and Λ

- MCNP5-1.60 and ENDF/B-VII.0

k_{eff}	1.00141	±	0.00002	Benchmark α (μs)	-1.1061	±	0.2296
β_{eff}	0.00647	±	0.00003	Calculated α (μs)	-0.8842	±	0.0902
Λ (ns)	5.72499	±	0.00297	$(C-E)/E^{(a)}$			-20%

(a) "E" is the expected or benchmark value. "C" is the calculated value.

- α calculated within 1σ (20%) of benchmark value (and within 3σ of calculation uncertainty)
  - If ~0.14% calculation bias in k_{eff} is ignored then α calculates within 2% of the benchmark value (1.1301 μs^{-1})

- Λ calculates 3.6% below the benchmark value of 5.94 ± 1.24 nsec

Completion of Evaluation

- The final evaluation will be published in the 2015 Edition of the *International Handbook of Reactor Physics Benchmark Experiments*
  - The full evaluation should be used for reference due to errors in the published transactions for this meeting

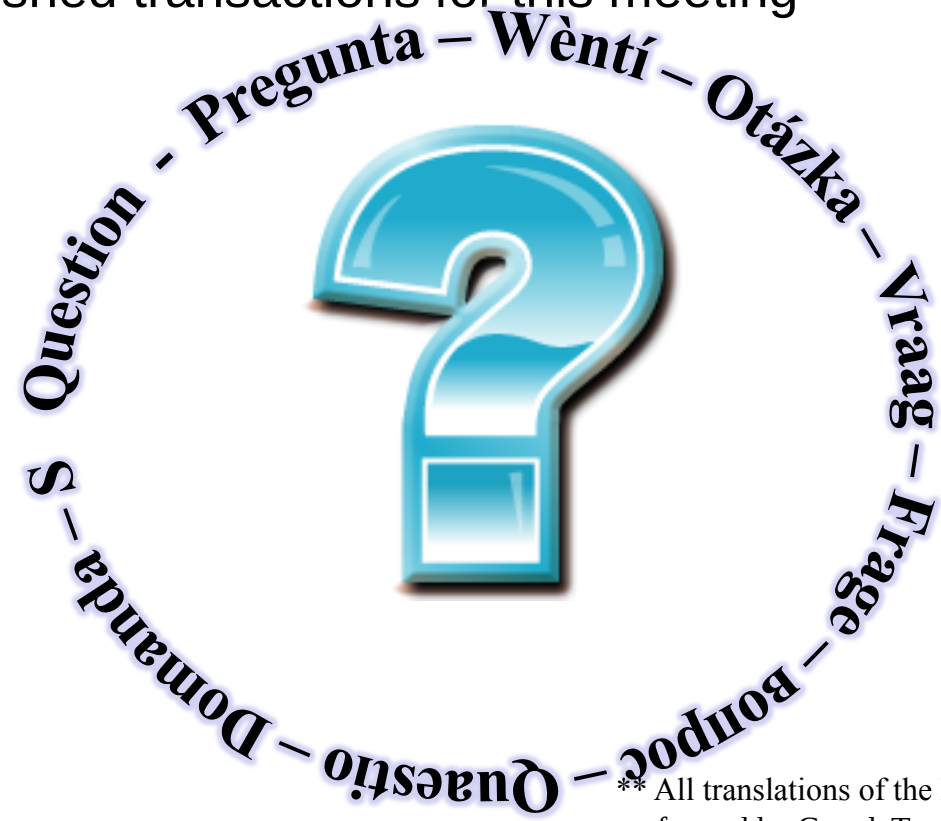

** All translations of the English word ‘Question’ were performed by GoogleTranslate. Any errors should be blamed on them. ☺

References and Acknowledgment

- J.T. MIHALCZO, J. J. LYNN, J. R. TAYLOR, G. E. HANSEN, D. B. PELOWITZ, "Delayed Critical ORNL Unreflected Uranium (93.20) Metal Sphere and the Pure Unreflected Uranium (93.80) Sphere Critical Mass," *Ann. Nucl. Energy*, **29**, 525-560 (2002).
- M.A. MARSHALL, "ORSphere: Physics Measurements for Bare, HEU(93.2)-Metal Sphere," *International Handbook of Reactor Physics Benchmark Experiments*, NEA/NSC/DOC(2006)1, Organization for Economic Co-operation and Development-Nuclear Energy Agency (OECD-NEA), Paris (2015).
- M.A. MARSHALL and J.D. BESS, "Benchmark Specifications and Results for -β_{eff} in a HEU Metal System Using ORSphere," *Trans. Am. Nucl. Soc.*, 110, 299-302, (2014).
- J. T. MIHALCZO, "Prompt Neutron Decay for Delayed Critical Bare and Natural-Uranium-Reflected Metal Spheres of Plutonium and Highly Enriched Uranium," *Nucl. Tech.*, **175**, 498-508 (2011).
- J. T. Mihalczo, "Neutron Importance and Fission Density in Uranium-235-Enriched Uranium and Plutonium Metal Spheres," *Nucl. Sci. Eng.*, **56**, 271-290 (1975).
- B.C. KIEDROWSKI, F. B. BROWN, P. H. WILSON, "Adjoint-Weighted Tallies for k-Eigenvalue Calculations with Continuous-Energy Monte Carlo," *Nucl. Sci. Eng.*, **168**, 226-241 (2011).
- M. B. CHADWICK, et al., "ENDF/B-VII.0: Next Generation Evaluated Nuclear Data Library for Nuclear Science and Technology," *Nucl. Data Sheets*, **107**, 2931-3060 (2006).
- J.J. DUDERSSTADT, "Nuclear Reactor Analysis," John, Wiley & Sons, New York, NY, (1976).

Special thanks to Brian Kiedrowski for his help in understanding and interpreting results.

Extra Slides

$$\beta_{eff}$$

β_{eff} – Other Method

- Time Correlation Measurements
  - Californium-252 Source
  - 0.00602 ± 0.00008
  - Low compared to GODIVA 1- 0.0066

"The low value of the effective delayed neutron fraction may have been the result of an improper theoretical formulation for correcting point kinetics for spatial effects." (Mihalczo)

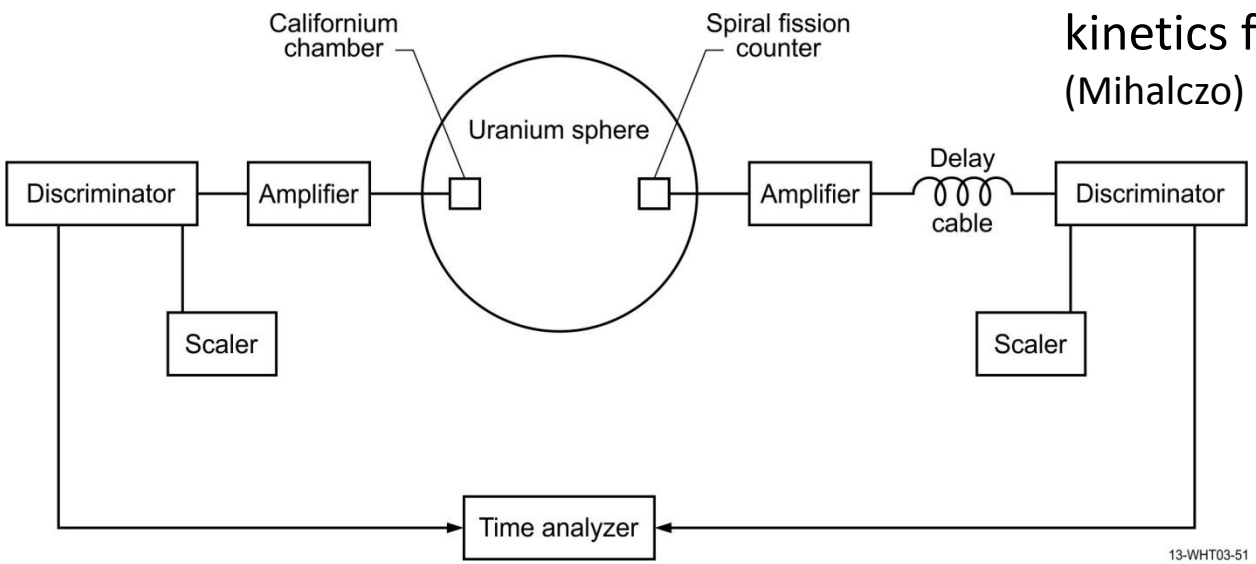

Central Void Worth Evaluation

Uncertainty		¢	Uncertainty		¢
Experiment Method	±	0.0230	^{234}U Abundance	±	0.0010
Fission Fraction Values	±	0.0010	^{235}U Abundance	±	0.0020
Treatment of ^{234}U and ^{236}U	±	0.0088	^{236}U Abundance	±	0.0010
Delayed Neutron Parameter [a]	±	0.1210	Small Sphere Diameter	±	0.0010
Small Sphere Mass	±	0.0010			
		Total	**± 0.123 ¢**		

(a) This is the systematic component of the delayed neutron parameter uncertainty. The random component is included in the experiment method uncertainty (see Section 2.4.1).

- No additional bias or bias uncertainty in benchmark model
- Benchmark Central Void Worth: **9.165 ± 0.123 ¢**

$$\beta_{eff} = \Delta\rho(\Delta k) / \Delta\rho(\$)$$

Central Void Worth Calculation

- Sn transport theory extrapolation to infinite order
- Calculated by experimenter
  - ONEDANT and XSDRNPM
  - Hansen-Roach and ENDF/B-VI cross sections

$$\mathbf{6.02 \pm 0.01 \times 10^{-4}\ \Delta k_{eff}}$$

- Repeated calculation with XSDRNPM (J.D. Bess)
  - ENDF/B-V.0, -VI.0, and VII.0
  - Average result 6.04×10^{-4}
  - Uncertainty in calculation increased to 0.4 pcm (bounding)

$$\beta_{eff} = \Delta\rho(\Delta k) / \Delta\rho(\$)$$

Alternative derivation of β_{eff}

- β_{eff} was calculated using HEU button worth measurements

	$\beta_{eff}^{given} = 0.00657 \pm 0.00009$			$\frac{\beta_{eff}-\beta_{eff}^{given}}{\sigma_\beta+\sigma_\beta^{given}}$ (a)
	Given Worth	$\rho(\Delta k)$ 10^3	β_{eff} 10^3	
16, 0.635-cm-thick Uranium Buttons on Sphere Surface	35.4 ± 2.868	2.862 ± 0.0028	8.085 ± 0.66	2.02
4, 0.3175-cm-thick Uranium Buttons on Sphere Surface	6.1415 ± 0.1167	0.43 ± 0.0028	7.005 ± 0.48	0.76
3, 0.3175-cm-thick Uranium Buttons in Socket Hole	7.86 ± 0.1274	0.54 ± 0.0028	6.89 ± 0.38	0.69

(a) This ratio of the difference of the calculated β_{eff} from the given β_{eff} over the sum of the two uncertainties given an idea of the agreement between the two β_{eff} values.

- All results within 3σ but…
- Large uncertainty makes result useless
  - Large calculation uncertainty
  - Measurement uncertainty

Derived β_{eff}

- β_{eff} = 0.00657 ± 0.00009
  - Δρ($)=0.09165 ± 0.00123 $
  - Δρ(Δk)=6.02 ± 0.01 x10^{-4} Δk_{eff}
- Repeated Worth Calculation with various codes and cross sections:

Code	Cross Section	$\rho(\Delta k)$			β_{eff}[e]			$\frac{\beta_{eff}-\beta_{eff}^{given}}{\sigma_\beta+\sigma_\beta^{given}}$ [g]
Given (Ref. 3)		0.000602	±	0.000002[f]	0.00657	±	0.00009	-
MCNP5[a]	ENDF/B-VII.0	0.000618	±	0.000011	0.00675	±	0.00015	1.28
MCNP5[b]	JEFF-3.1	0.00065	±	0.00003	0.00706	±	0.00033	1.48
MCNP5[b]	JENDL-3.3	0.00058	±	0.00003	0.00632	±	0.00032	0.77
MONK[c]	JEFF-3.1	0.00056	±	0.00009	0.00611	±	0.00099	-0.46
MONK[c]	ENDF/B-VII.0	0.00053	±	0.00009	0.00578	±	0.00099	-0.79
XSDRNPM[d]	ENDF/B-VII.0-238g	0.000605	±	10^{-8}	0.00661	±	0.00009	1.02
XSDRNPM[d]	ENDF/B-VI.0-238g	0.000608	±	10^{-8}	0.00664	±	0.00009	1.82
XSDRNPM[d]	ENDF/B-V.0-238g	0.000605	±	10^{-8}	0.00660	±	0.00009	0.68

Variation in Delayed Neutron Parameters

COMPARISON OF SELECT ^{235}U AND ^{238}U DELAYED NEUTRON PARAMETERS

	Keepin, et al. [3,4]				Brady and England / ENDF/B-VI.8 / ENDF/B-VII.1[4,10,11,12], CENDL-3.1[16], TENDL-2012 [17][1]				ENDF/B-VII.0 [8]			
	^{235}U		^{238}U		^{235}U		^{238}U		^{235}U		^{238}U	
Group	λ_i	α_i	λ_i	α_i	λ_i	α_i	λ_i	α_i	λ_i	α_i	λ_i	α_i
1	0.0127	0.038	0.0132	0.013	0.0133	0.035	0.0136	0.0139	0.0125	0.032	0.0125	0.0103
2	0.0317	0.213	0.0321	0.137	0.0327	0.1807	0.0313	0.1128	0.0318	0.1664	0.0303	0.1148
3	0.115	0.188	0.139	0.162	0.1208	0.1725	0.1233	0.131	0.1094	0.1613	0.1159	0.1278
4	0.311	0.407	0.358	0.388	0.3028	0.3868	0.3237	0.3851	0.317	0.4596	0.3415	0.4518
5	1.40	0.128	1.41	0.225	0.8495	0.1586	0.906	0.254	1.354	0.1335	1.3186	0.2335
6	3.87	0.026	4.02	0.075	2.853	0.0664	3.0487	0.1031	8.6364	0.0472	9.979	0.0617

	JENDL-3.3 / JENDL-4.0 [14,15]				TENDL-2013 [18]			
	^{235}U		^{238}U		^{235}U		^{238}U	
Group	λ_i	α_i	λ_i	α_i	λ_i	α_i	λ_i	α_i
1	0.0124	0.0330	0.0132	0.0130	0.0125	0.0340	0.0136	0.0084
2	0.0305	0.2190	0.0321	0.1370	0.0283	0.1501	0.0313	0.1040
3	0.1114	0.1960	0.1386	0.1620	0.0425	0.0992	0.1233	0.0375
4	0.3014	0.3950	0.3591	0.3880	0.1330	0.2001	0.3237	0.1370
5	1.1360	0.1150	1.4150	0.2250	0.2925	0.3122	0.9060	0.2940
6	3.0140	0.0420	4.0300	0.0750	0.6665	0.0932	3.0487	0.1980

	Spriggs, et al. [8]			ABBN / JEFF-3.1[6,13]				
		^{235}U	^{238}U		^{234}U	^{235}U	^{236}U	^{238}U
Group	λ_i	α_i	α_i	λ_i	α_i	α_i	α_i	α_i
1	0.0125	0.034	0.008	0.0125	0.05485	0.03278	0.02449	0.0084
2	0.0283	0.150	0.104	0.0283	0.15660	0.15391	0.09797	0.1040
3	0.0425	0.099	0.038	0.0425	0.10476	0.09135	0.10797	0.0375
4	0.1330	0.200	0.137	0.1330	0.18230	0.19688	0.12696	0.1370
5	0.2925	0.312	0.294	0.2925	0.35475	0.33079	0.40988	0.2940
6	0.6665	0.093	0.198	0.6665	0.08300	0.09025	0.13696	0.1980
7	1.6348	0.087	0.128	1.6348	0.04618	0.08115	0.08747	0.1280
8	3.5546	0.025	0.093	3.5546	0.01756	0.02289	0.00830	0.0931

Effect on β_{eff}

- The derived β_{eff} varied drastically with the delayed neutron parameters.
- The MCNP5-1.60 did not show the same variation with variation of cross section set.

Delayed Neutron Parameter Source	Calc. β_{eff}	MCNP β_{eff}
Keepin, Wimett, and Zeigler [3,4]	0.00657	-
Spriggs, Campbell, and Piksaikin [10]	0.00640 (-2.59%)	-
Brady and England, ENDF/B-VI.8, ENDF/B-VII.1 [4,11,12,9]	0.00756 (15.07%)	- 0.00650 (-1.04%)
ABBN, JEFF-3.1 [6,13]	0.00643 (-2.13%)	- 0.00649 (-1.19%)
ENDF/B-VII.0 [8]	0.00771 (17.35%)	0.00650 (-1.04%)
JENDL-3.3, JENDL-4.0 [14,15]	0.00645 (-1.83%)	0.00649 (-1.19%) 0.00636 (-3.17%)
CENDL-3.1[16]	0.00758 (15.37%)	0.00643 (-2.11%)
TENDL-2012 [17]	0.00756 (15.07%)	0.00650 (-1.04%)
TENDL-2013 [18]	0.00643 (-2.13%)	-

Results

- Simpler calculation assumes approximates β_{eff} for entire system using the same average effectiveness
- MCNP method analyses entire system when resolving the point kinetics model with more realistic weighting of the delayed neutron parameters
- Origin of discrepancies between derived and calculated β_{eff} and the variation of results with delayed neutron parameters warrants further investigation

Simple Benchmark Model Sample Results

			k_{eff}	±	σ	$\frac{C-E^{(f)}}{E}$
Benchmark Model		Case 1	1.0031	±	0.0007	-
		Case 2	0.9966	±	0.0007	-
MCNP5[a]	ENDF/B-VII.0	Case 1	1.00441	±	0.00002	0.18%
		Case 2	0.99826	±	0.00002	0.17%
MCNP5[a]	JEFF-3.1	Case 1	1.00088	±	0.00002	-0.17%
		Case 2	0.99477	±	0.00002	-0.18%
MCNP5[a]	JENDL-3.3	Case 1	1.00744	±	0.00002	0.49%
		Case 2	1.00139	±	0.00002	0.49%
KENO-V.a[b]	ENDF/B-VII.0-CE	Case 1	1.00416	±	0.00002	0.16%
		Case 2	0.99803	±	0.00002	0.15%
KENO-V.a[b]	ENDF/B-VII.0-238g	Case 1	1.00548	±	0.00002	0.29%
		Case 2	0.99932	±	0.00002	0.28%
MONK[c]	ENDF/B-VII.0	Case 1	1.0046	±	0.0001	0.20%
		Case 2	0.9986	±	0.0001	0.21%
MONK[c]	JEFF-3.1	Case 1	1.0013	±	0.0001	-0.13%
		Case 2	0.9952	±	0.0001	-0.13%
XSDRNPM[d]	ENDF/B-VII.0-238g	Case 1	1.00575	±	-	0.32%
		Case 2	0.99960	±	-	0.31%
XSDRNPM[d]	ENDF/B-VII.0-27n19g	Case 1	1.00760	±	-	0.50%
		Case 2	1.00145	±	-	0.49%
XSDRNPM[d]	ENDF/B-VI.8-238g	Case 1	1.00167	±	-	-0.09%
		Case 2	0.99553	±	-	-0.10%
XSDRNPM[d]	ENDF/B-V.2-238g	Case 1	1.00184	±	-	-0.07%
		Case 2	0.99573	±	-	-0.08%
COG11.1[e]	ENDF/B-VII.1	Case 1	1.00494	±	0.00003	0.19%
		Case 2	0.99875	±	0.00003	0.21%
COG11.1[e]	JEFF-3.1.2	Case 1	1.00136	±	0.00004	-0.17%
		Case 2	0.99521	±	0.00003	-0.14%
COG11.1[e]	JENDL-4	Case 1	1.00281	±	0.00004	-0.03%
		Case 2	0.99677	±	0.00005	0.02%

Detailed Benchmark Model Sample Results

			k_{eff}	±	σ	$\frac{C-E}{E}$ [e]
Benchmark Model		Case 1	1.0026	±	0.0007	-
		Case 2	0.9965	±	0.0007	-
MCNP5[a]	ENDF/B-VII.0	Case 1	1.00385	±	0.00002	0.13%
		Case 2	0.99821	±	0.00002	0.17%
MCNP5[a]	JEFF-3.1	Case 1	1.00039	±	0.00002	-0.22%
		Case 2	0.99472	±	0.00002	-0.18%
MCNP5[a]	JENDL-3.3	Case 1	1.00692	±	0.00002	0.43%
		Case 2	1.00133	±	0.00002	0.48%
KENO-VI[b]	ENDF/B-VII.0-CE	Case 1	1.00495	±	0.00002	0.24%
		Case 2	0.99947	±	0.00002	0.29%
KENO-VI[b]	ENDF/B-VII.0-238g	Case 1	1.00495	±	0.00002	0.24%
		Case 2	0.99947	±	0.00002	0.29%
MONK[c]	ENDF/B-VII.0	Case 1	1.0034	±	0.0001	0.08%
		Case 2	0.9985	±	0.0001	0.20%
MONK[c]	JEFF-3.1	Case 1	0.9997	±	0.0001	-0.29%
		Case 2	0.9951	±	0.0001	-0.14%
COG11.1[d]	ENDF/B-VII.1	Case 1	1.00421	±	0.00008	0.17%
		Case 2	0.99795	±	0.00003	0.14%
COG11.1[d]	JEFF-3.1.2	Case 1	1.00054	±	0.00009	-0.20%
		Case 2	0.99439	±	0.00003	-0.22%
COG11.1[d]	JENDL-4	Case 1	1.00193	±	0.00009	-0.06%
		Case 2	0.99598	±	0.00005	-0.06%

Central Void Worth Measured

- 43 measurements of stable reactor period with and without the central void present

$$\rho^k = \frac{l}{T_p} + \sum_{i=1}^{6} \frac{\beta_i}{1+\lambda_i T_p} \rightarrow \rho^{\$} = \sum_{i=1}^{6} \frac{\alpha_i}{1+\lambda_i T_p}$$

- Requires delayed neutron parameters α and Λ.
- Independent of β. Assumes $\beta \approx \beta_{eff}$
- Experimenter used Keepin, Wimmet, and Zeigler Delayed Neutron Parameters
- Experimental Central Void Worth: 9.165 ± .023 ¢

Conclusion

- Benchmark β_{eff} value for ORSphere evaluated and found to be acceptable
    - 0.00657 ± 0.00009

- Benchmark value used Keepin et. al. delayed neutron parameter
  - A variety of delayed neutron parameters yield a large spread of β_{eff} values
  - Parameters based on Brady and England data and ENDF/B-VII.0 gave largest variation from benchmark model

- Additionally, the wide spread of β_{eff} was not present when MCNP was used to calculate value regardless of the cross section set used.

- Observed discrepancies warrant further investigation.