75 Los Alamos

NATIONAL LABORATORY

EST. 1943

Preliminary Benchmark Analysis of Component Critical Configuration of KRUSTY

ANS Winter 2018

Orlando, FL

Kristin Smith, Jesson Hutchinson, Theresa Cutler, and Rene Sanchez

11/14/2018

Operated by Los Alamos National Security, LLC for the U.S. Department of Energy's NNSA

LA-UR-18-30783

What is KRUSTY?

KRUSTY Purpose

- **Prototype and proof of concept for Kilopower Project**
- **HEU system reflected by BeO and steel**
- **Two Options:**
  - Power source
  - Deep space probe
- **Testing began Nov. 2017**
  - Component critical configuration
    - BeO Worth
    - B_4C Worth
    - Benchmark configurations
- **28-hour test March 2018**

Component Critical Configuration

- **25 cm HEU fuel**
  - 93.07% enriched
  - 7.65 wt% molybdenum
  - Annulus with 8 slots

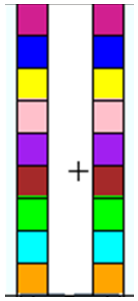

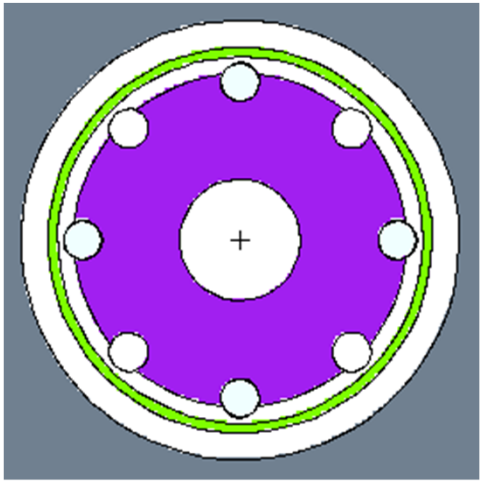

Component Critical Configuration

- **25 cm HEU fuel**
  - 93.07% Enriched
  - 7.65 wt% molybdenum
  - Annulus with 8 slots
- **BeO Reflectors**
  - Top, Bottom, and Ring

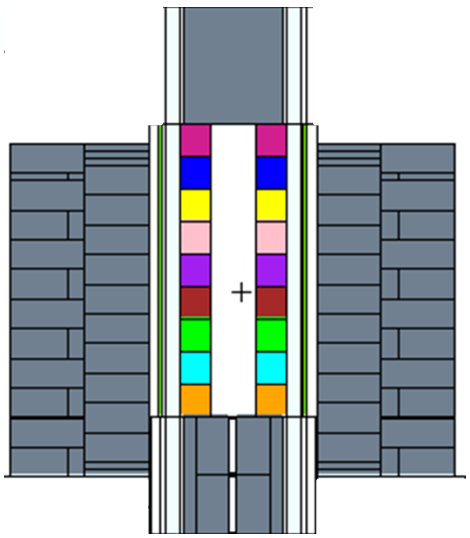

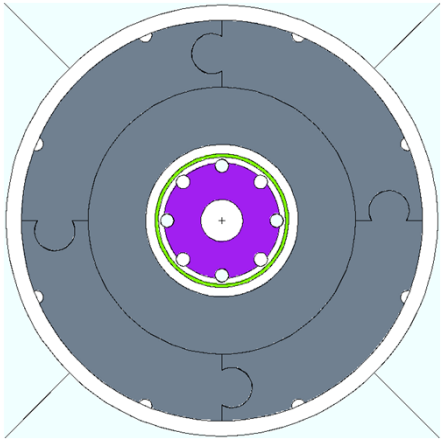

Component Critical Configuration

- **25 cm HEU fuel**
  - 93.07% Enriched
  - 7.65 wt% molybdenum
  - Annulus with 8 slots
- **BeO Reflectors**
  - Top, Bottom, and Ring
- **Shielding**
  - Outer shields and multi-layered top and bottom
- **Critical Configuration**
  - 28.575 cm
  - Excess reactivity: 9.5¢
  - k_{eff}: 1.0006

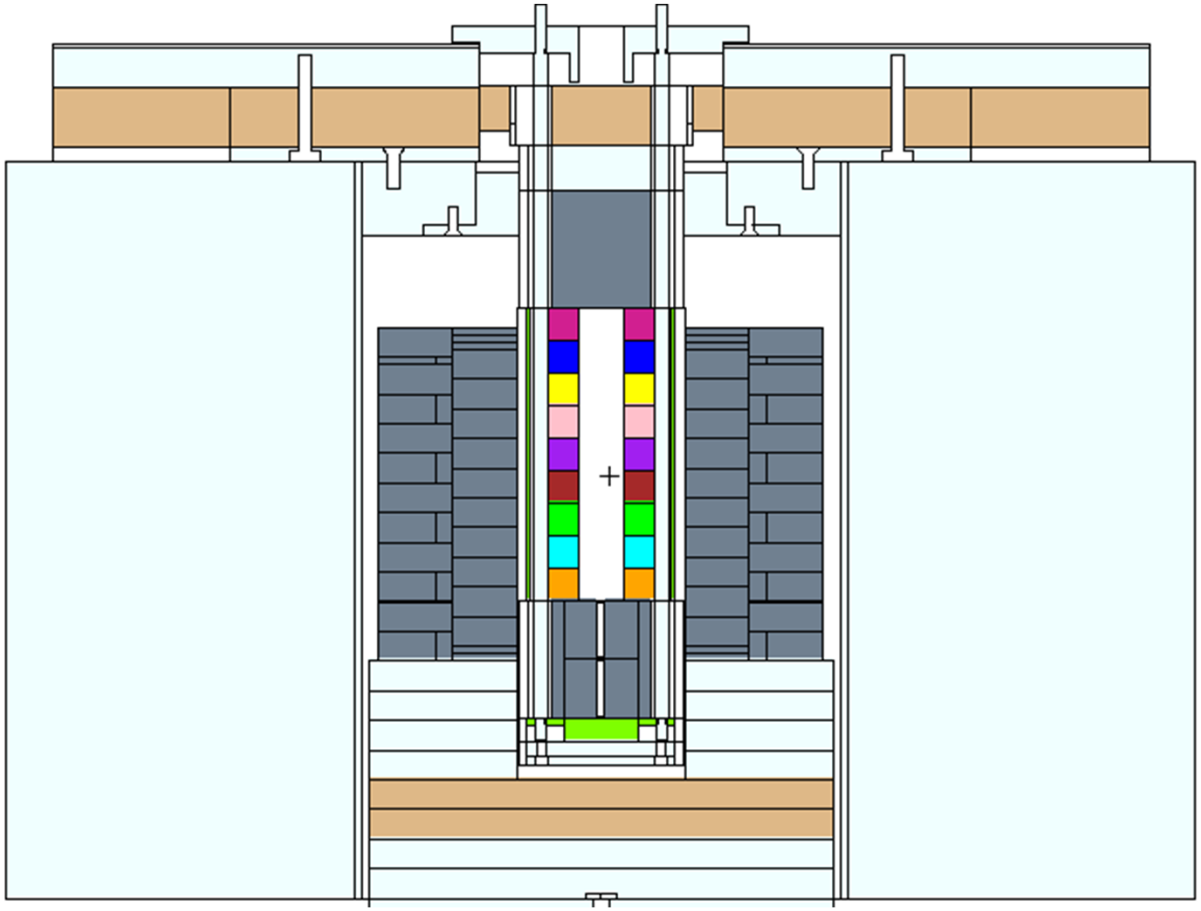

Why benchmark KRUSTY?

BeO Benchmarks

- 9 Experiments
- Large disagreement
- KRUSTY will add new modern experiment

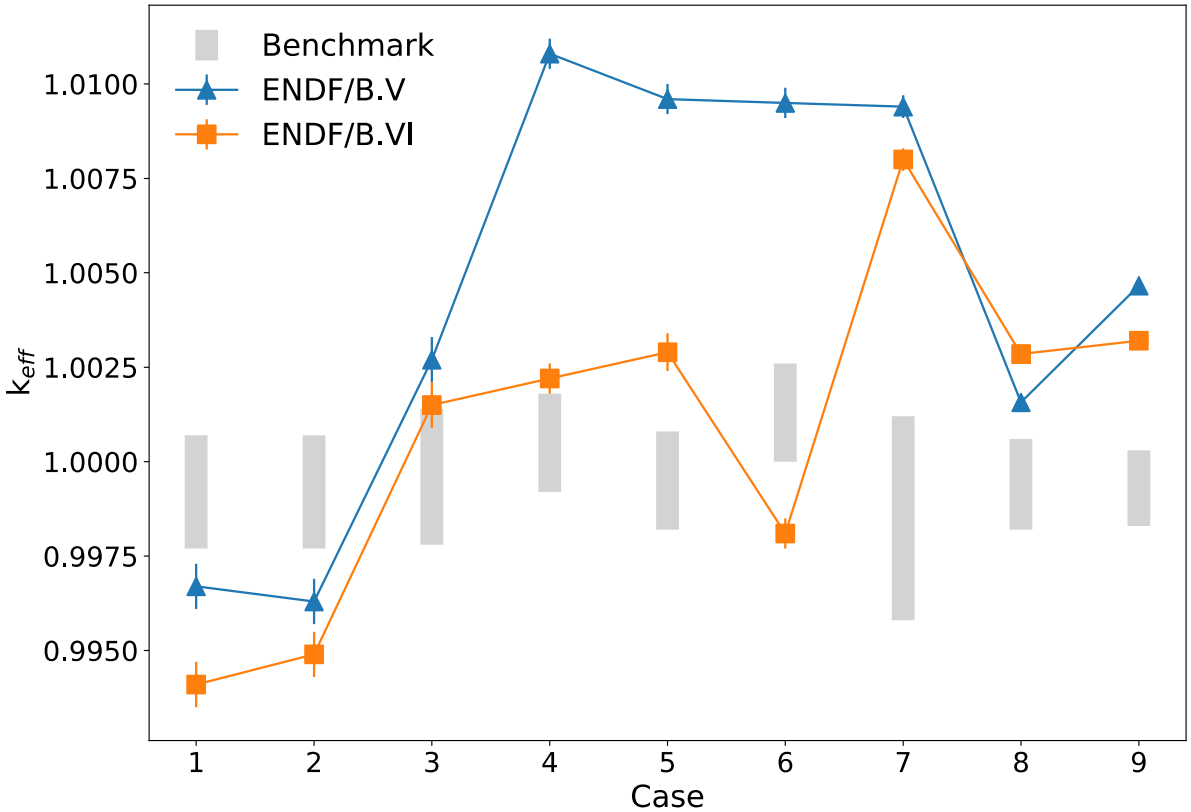

Molybdenum Benchmarks

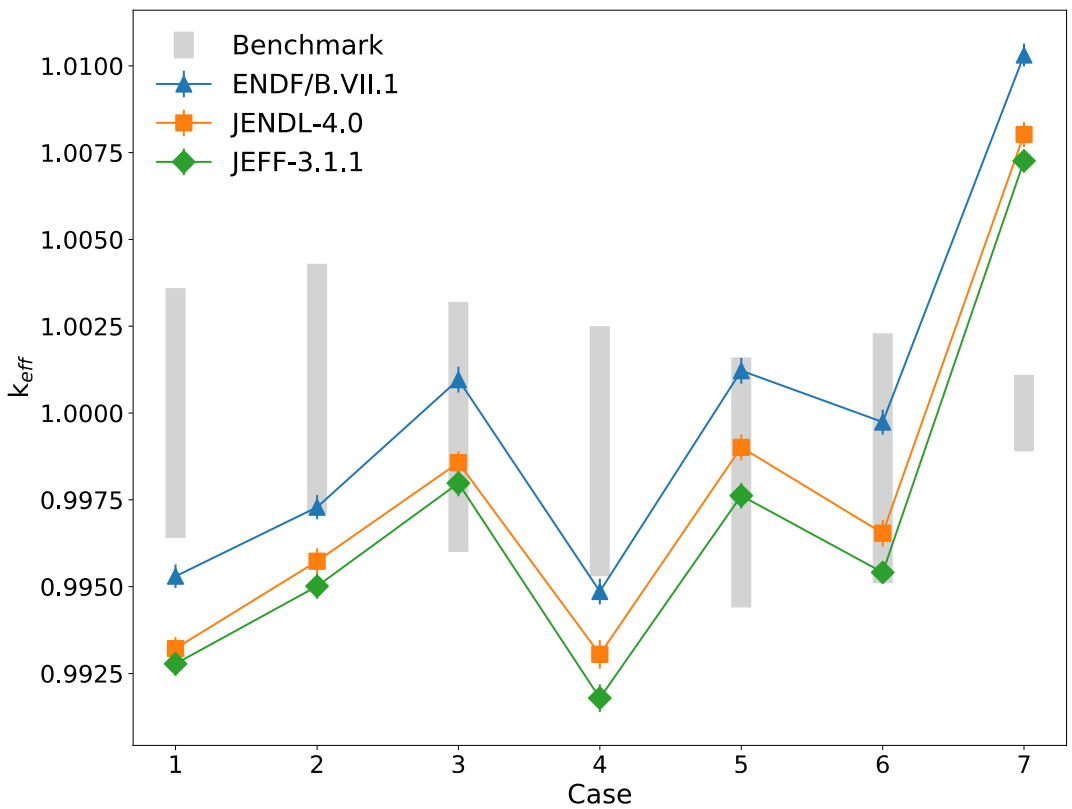

- Seven Experiments
- Discrepancy

- KRUSTY may add much needed new point

Sensitivity and Uncertainty Analysis

Evaluated Parameters

Mass & Dimensions	Positioning	Composition
HEU Core	Platen Height	Impurities
BeO Pieces	Radial Alignment	^{235}U Enrichment
SS Pieces	BeO Gaps	B_4C Enrichment
B_4C Shields	SS Shield Gaps	Air

Positioning

- **Platen height**
  - Governed by Comet screws

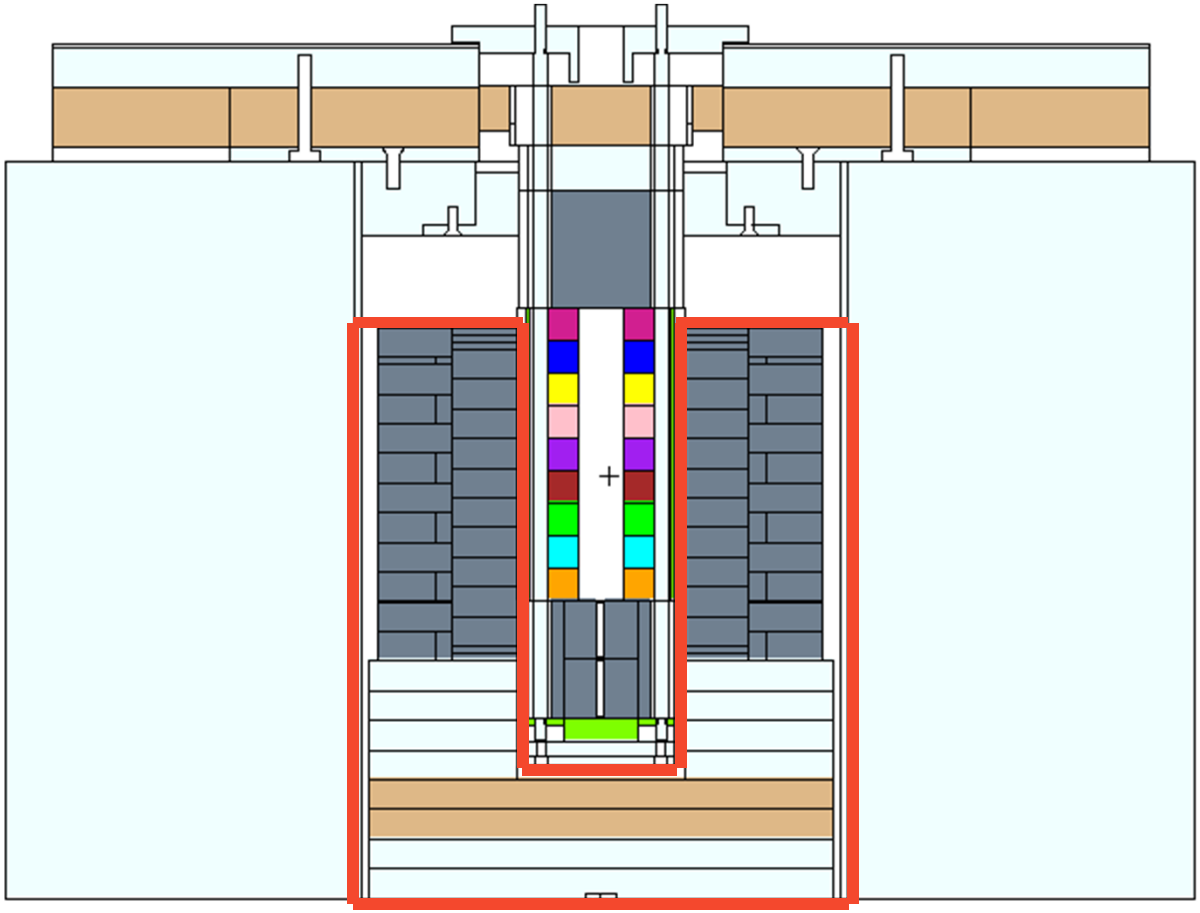

Positioning

- **Platen height**
  - Governed by Comet screws
- **Radial position**
  - Alignment of fuel
  - Jacket
  - BeO ring shield
  - Platen

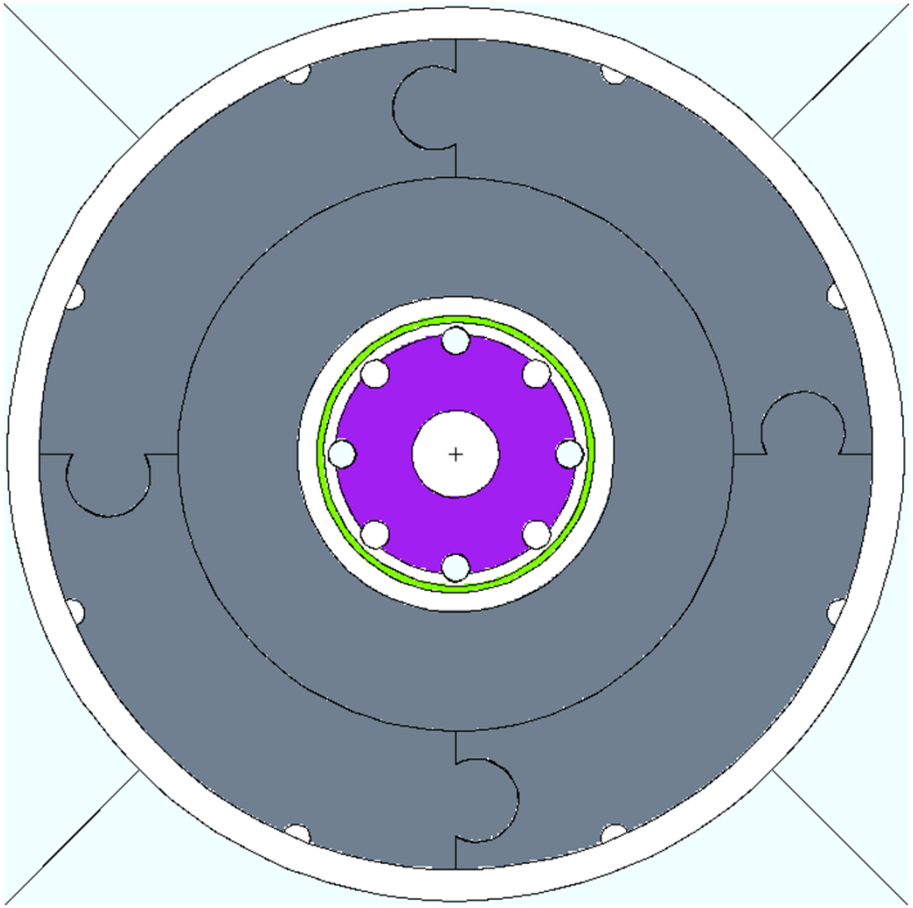

Positioning

- **Platen height**
  - Governed by Comet screws
- **Radial position**
  - Alignment of fuel
  - Jacket
  - BeO ring shield
  - Platen
- **BeO gaps**
  - Radial
  - Axial
  - Angle

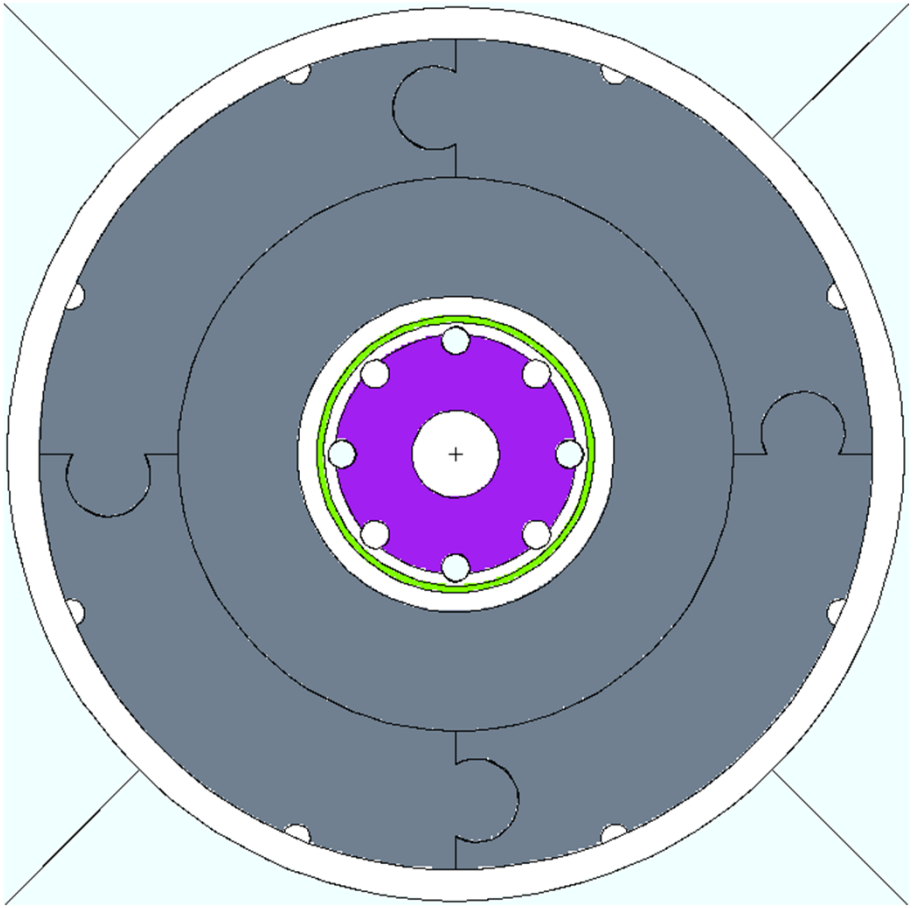

Positioning

- **Platen height**
  - Governed by Comet screws
- **Radial position**
  - Alignment of fuel
  - Jacket
  - BeO ring shield
  - Platen
- **BeO gaps**
  - Radial
  - Axial
  - Angle
- **Shield Gaps**

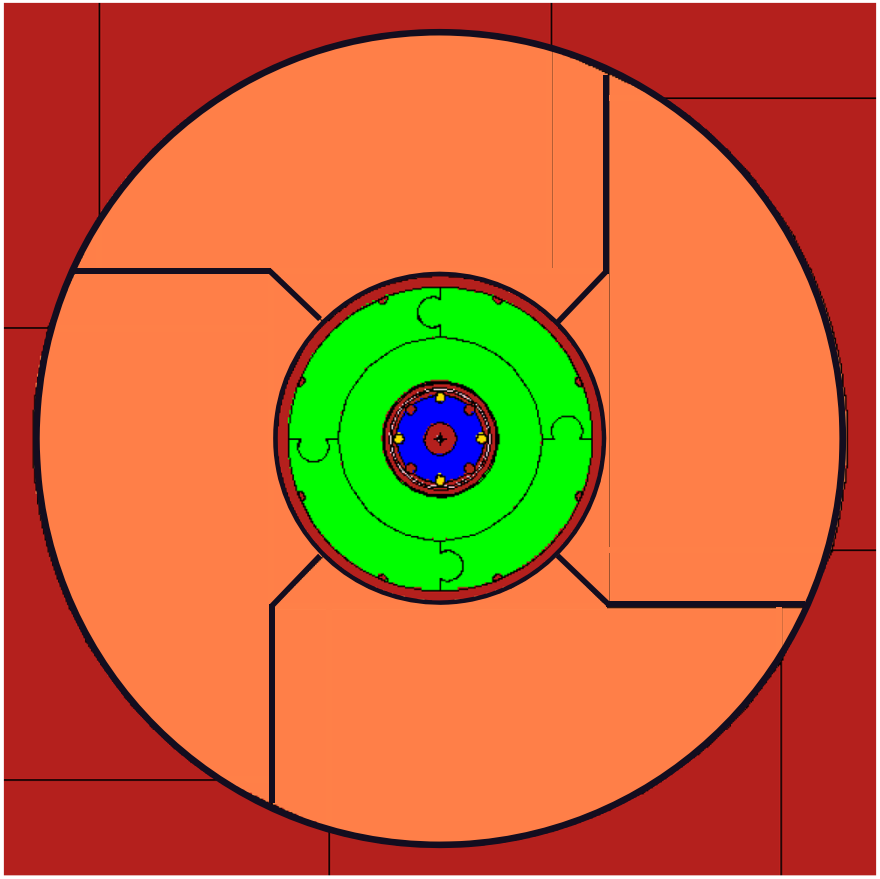

Results

k_{eff} vs. ENDF-B Library

Cross Section Library	k_{eff}	$\pm 1\sigma$	C-E (pcm)
ENDF-B/VIII.0	0.99366	0.00001	-694
ENDF-B/VII.1	0.99647	0.00001	-413

- **Experimental k_{eff} 1.0006**
- **For Standard Reference Materials:**
  - Add 0.02966 to k_{eff}
- **Modeled with MCNP6.2®**
- **Active Histories: 4 Billion**

Fuel Mass Sensitivity

Piece	Mass (g)	Central Difference Sensitivity	$\pm 1\sigma$	KSEN Sensitivity	$\pm 1\sigma$
D7XP (Top)	10741 ± 0.173	0.12471	0.08822	0.11930	0.25717
DDND (Middle)	10718 ± 0.173	0.12454	0.08822	0.21971	0.47545
DAR2 (Bottom)	10741 ± 0.173	0.12476	0.08822	0.18619	0.38324

Fuel Mass Sensitivity

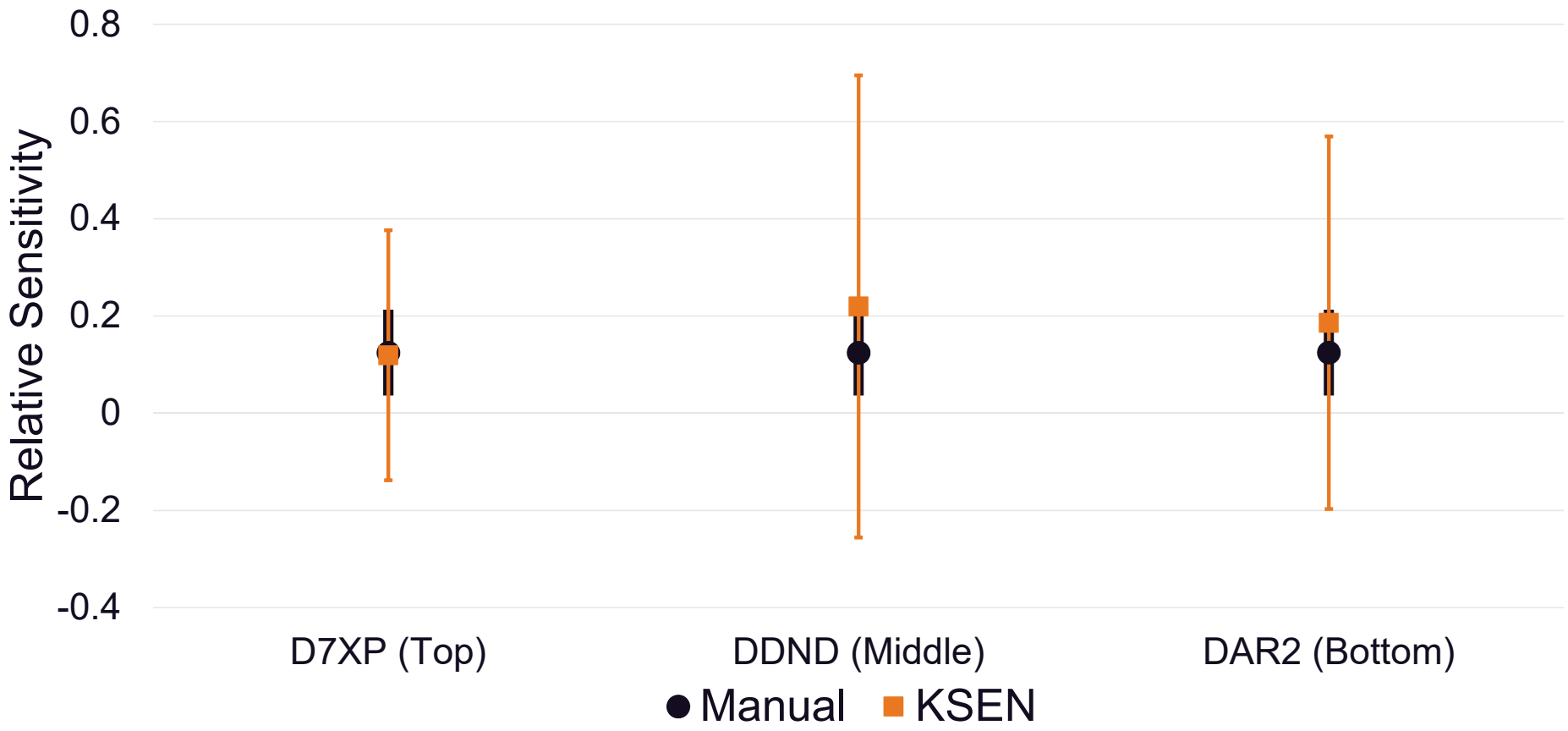

Fuel Thickness Sensitivity

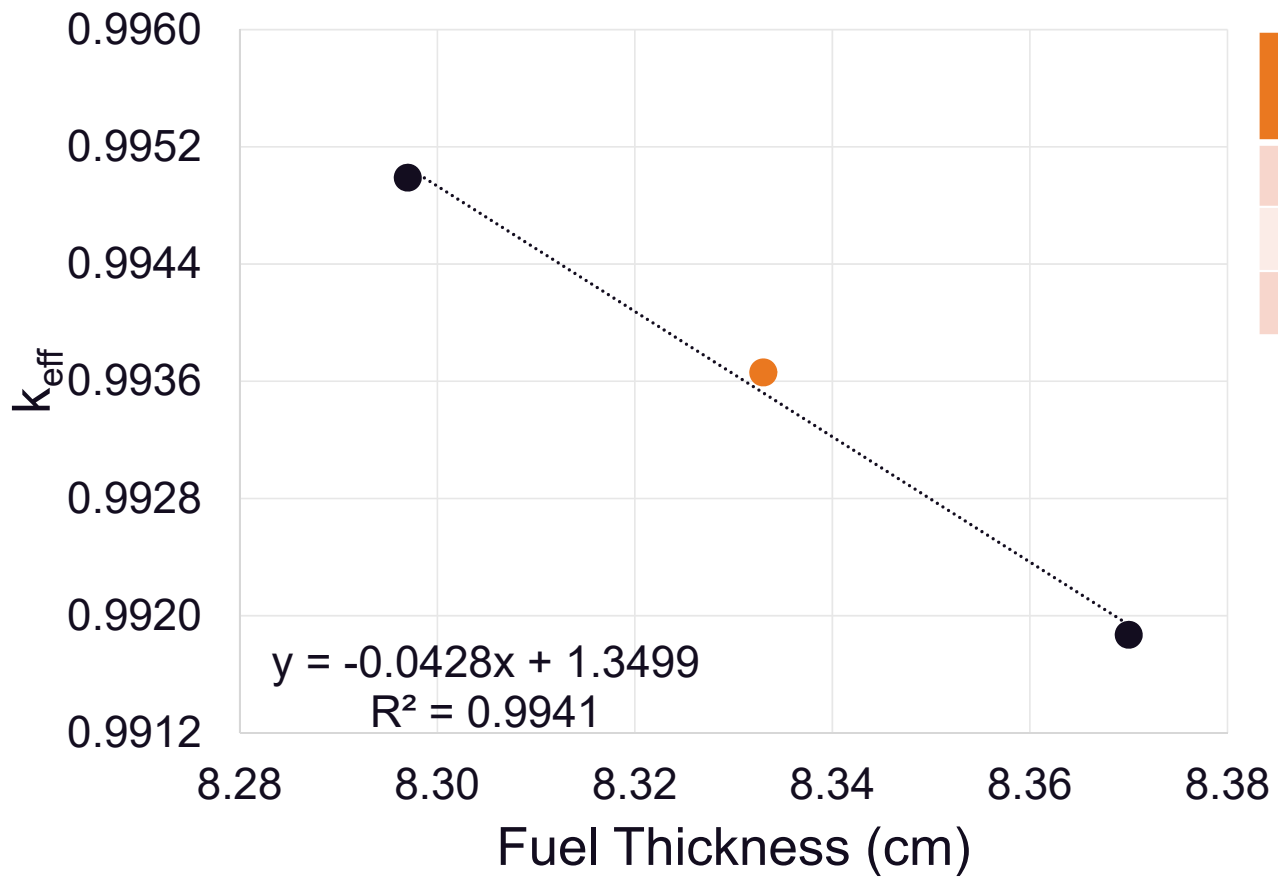

Thickness (cm)	k_{eff}	$\pm 1\sigma$
8.297	0.99499	0.00001
8.333	0.99366	0.00001
8.370	0.99187	0.00001

$$\mathbf{T = 8.333 \pm 0.007\ cm}$$
$$\mathbf{S = -0.35842 \pm 0.00162}$$

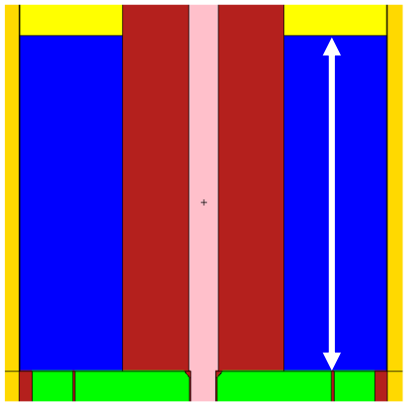

Fuel Outer Diameter Sensitivity

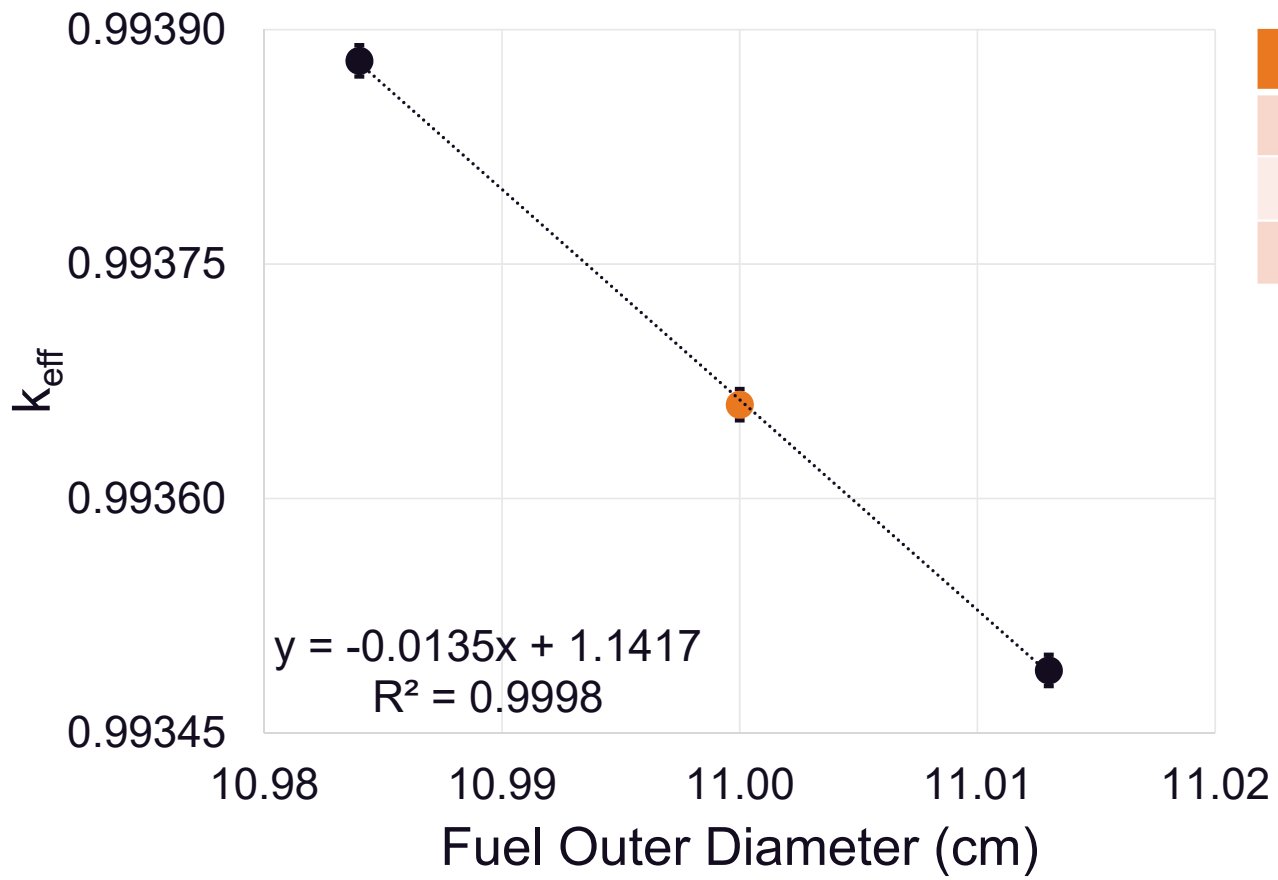

O.D. (cm)	k_{eff}	$\pm 1\sigma$
10.984	0.99388	0.00001
11.000	0.99366	0.00001
11.013	0.99349	0.00001

$$\mathbf{O.D. = 11.000 \pm 0.003\ cm}$$
$$\mathbf{S = -0.14887 \pm 0.00540}$$

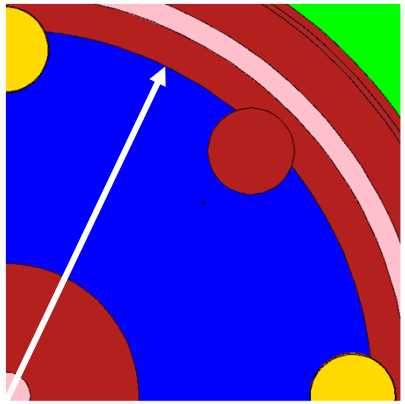

Fuel Inner Diameter Sensitivity

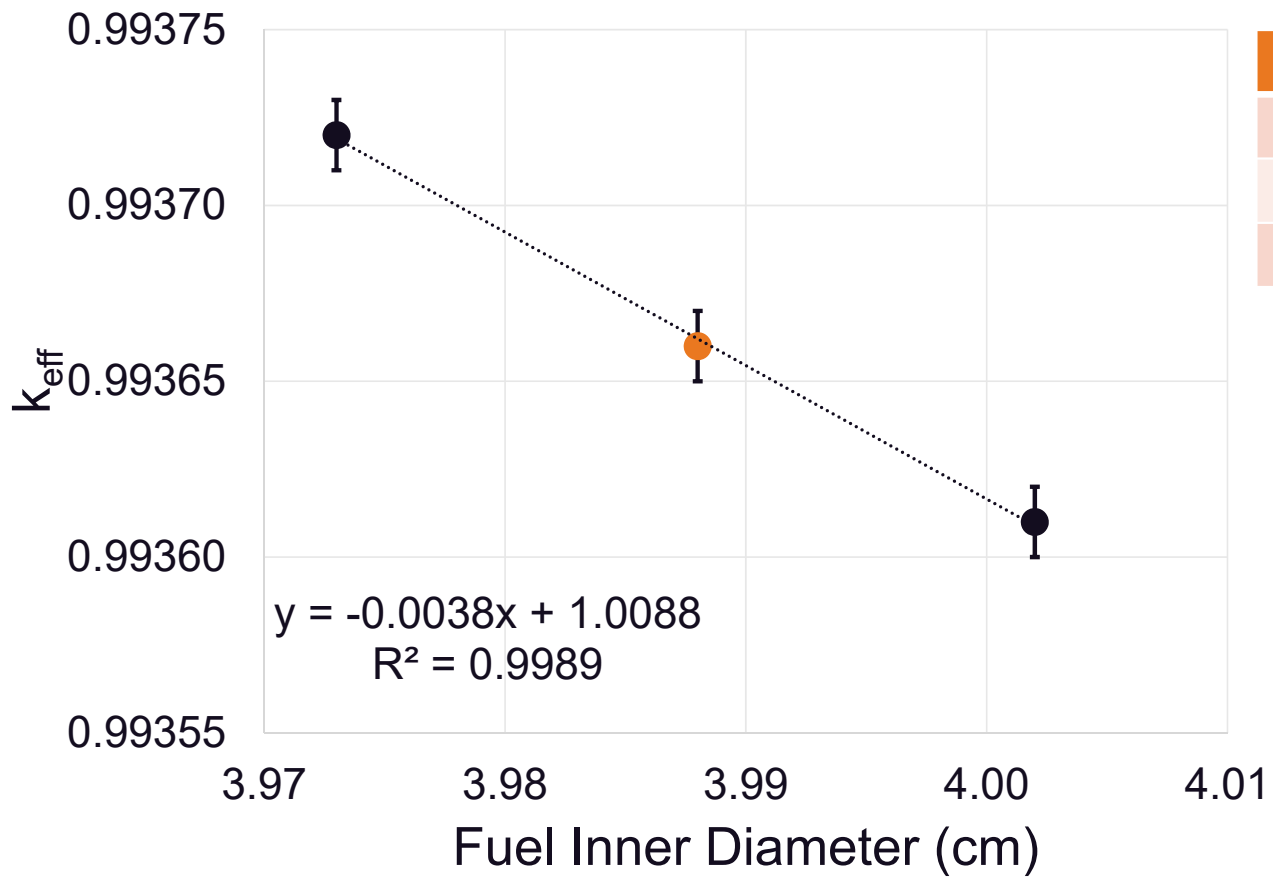

I.D. (cm)	k_{eff}	$\pm 1\sigma$
3.973	0.99372	0.00001
3.988	0.99366	0.00001
4.002	0.99361	0.00001

$$\mathbf{I.D. = 3.988 \pm 0.003\ cm}$$
$$\mathbf{S = -0.01522 \pm 0.00196}$$

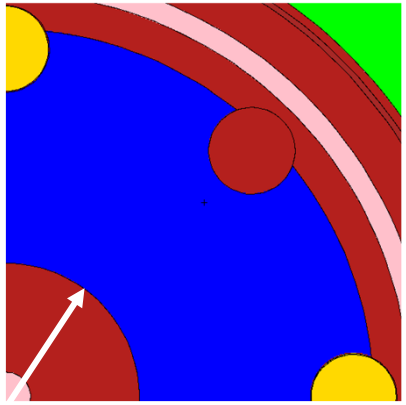

Fuel Slot Diameter Sensitivity

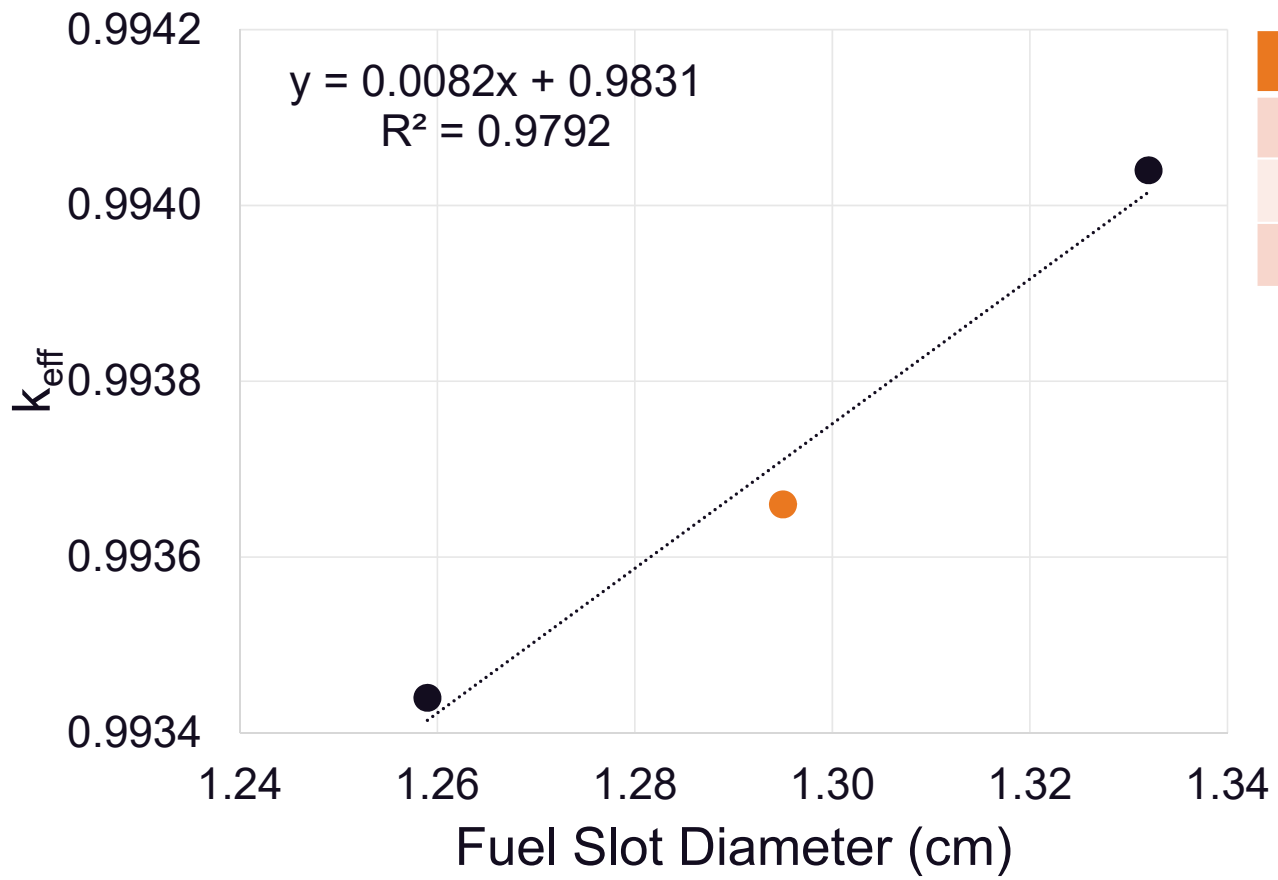

S.D. (cm)	k_{eff}	$\pm 1\sigma$
1.259	0.99344	0.00001
1.295	0.99366	0.00001
1.332	0.99404	0.00001

$$\mathbf{S.D. = 1.295 \pm 0.007\ cm}$$
$$\mathbf{S = 0.01071 \pm 0.00025}$$

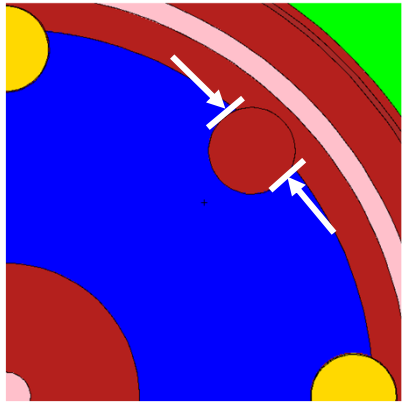

Summary

- **Benchmark will use ENDF/B-VIII.0**
- **Sensitive to fuel mass**
  - Manually calculated sensitivity agrees with KSEN
  - KSEN will be used for future mass perturbations
- **Sensitive to fuel dimensions**
  - Behaving as expected

Acknowledgement

This work was supported by the DOE Nuclear Criticality Safety Program, funded and managed by the National Nuclear Security Administration for the Department of Energy.

Thanks for listening!

- **Kristin Smith**
  - kristinnsmith@tamu.edu